Workshop Manual

Polo 1995 ➤

General body repairs, interior

Edition 03.2005

Protected by copyright. Copying for private or commercial purposes, in part or in whole, is not permitted unless authorised by Volkswagen AG. Volkswagen AG does not guarantee or accept any liability with respect to the correctness of information in this document. Copyright by Volkswagen AG.

satelettronica

List of Workshop Manual Repair Groups

Protected by copyright. Copying for private or commercial purposes, in part or in whole, is not permitted unless authorised by Volkswagen AG. Volkswagen AG does not guarantee or accept any liability with respect to the correctness of information in this document. Copyright by Volkswagen AG.

Repair Group

68 - Interior equipment
69 - Passenger protection
70 - Trim, insulation
72 - Seat frames
74 - Seat - padding, covers

satelettronica

Technical information should always be available to the foremen and mechanics, because their careful and constant adherence to the instructions is essential to ensure vehicle road-worthiness and safety. In addition, the normal basic safety precautions for working on motor vehicles must, as a matter of course, be observed.

All rights reserved.
No reproduction without prior agreement from publisher.

Copyright © 2015 Volkswagen AG, Wolfsburg

K0050240620

Contents

68 - Interior equipment . . . 1

1 Interior mirror . . . 1
1.1 Removing and installing interior mirror . . . 1
1.2 Bonding retaining plate for interior mirror . . . 1
1.3 Automatic anti-dazzle interior mirror 10.99 ▸ . . . 2
1.4 Removing and installing interior mirror (with rain sensor) 10.99 ▸ . . . 3
1.5 Bonding on interior mirror base with rain sensor 10.99 ▸ . . . 4

2 Compartments, covers and trims . . . 6
2.1 Removing and installing centre console ▸ 09.99 . . . 6
2.2 Removing and installing centre console 10.99 ▸ . . . 6
2.3 Removing and installing handbrake lever handle and trim ▸ 09.99 . . . 10
2.4 Removing and installing handbrake lever handle 10.99 ▸ . . . 11
2.5 Removing driver side storage compartment ▸ 07.97 . . . 13
2.6 Removing driver side storage compartment 08.97 ▸ 09.99 . . . 14
2.7 Removing and installing driver side storage compartment 10.99 ▸ . . . 15
2.8 Removing and installing footwell cover on driver side . . . 16
2.9 Removing and installing glove box ▸ 09.99 . . . 16
2.10 Removing and installing glove box 10.99 ▸ . . . 17
2.11 Removing and installing passenger side storage compartment ▸ 09.99 . . . 18
2.12 Removing trim for dash panel insert ▸ 09.99 . . . 19
2.13 Removing trim for instrument cluster 10.99 ▸ . . . 19
2.14 Removing sun visor . . . 20
2.15 Removing centre sun visor 10.99 ▸ . . . 20

3 Grab handles . . . 21
3.1 Removing and installing grab handle (roof) ▸ 09.99 . . . 21
3.2 Removing grab handle (roof) 10.99 ▸ . . . 21

4 Sill panel trims . . . 22
4.1 Removing and installing sill panel trim . . . 22

69 - Passenger protection . . . 23

1 Seat belts . . . 23
1.1 Safety regulations for belt tensioners . . . 23
1.2 Disposal of belt tensioner units . . . 23
1.3 Checking belt tensioner . . . 23
1.4 Removing and installing front seat belts with belt tensioner ▸ 09.99 . . . 24
1.5 Removing and installing front seat belts with belt tensioner 10.99 ▸ . . . 25
1.6 Removing and installing belt height adjustment ▸ 09.99 . . . 26
1.7 Removing and installing belt height adjustment 10.99 ▸ . . . 27
1.8 Removing and installing front fitting (2-door) . . . 27
1.9 Removing and installing front fitting (4-door) . . . 28
1.10 Removing and installing front belt buckle . . . 28
1.11 Removing and installing rear seat belts . . . 28
1.12 Removing and installing belt reel ▸ 09.99 . . . 29
1.13 Removing and installing belt reel 10.99 ▸ . . . 30
1.14 Removing and installing lap belt and double buckle . . . 31

2 Inspecting seat belts . . . 32
2.1 Points to check . . . 32

3 Airbag . . . 35
3.1 Tools . . . 35
3.2 Overview - installation locations . . . 35
3.3 Safety precautions when working on the airbag . . . 38
3.4 Disposal of airbag units . . . 39

Protected by copyright. Copying for private or commercial purposes, in part or in whole, is not permitted unless authorised by Volkswagen AG. Volkswagen AG does not guarantee or accept any liability with respect to the correctness of information in this document. Copyright by Volkswagen AG.
satelettronica

3.5 Deactivating the airbag . . . 39
3.6 Renewing airbag units following an accident . . . 39
3.7 Removing and installing driver side airbag unit ‣ 09.99 . . . 40
3.8 Removing and installing driver side airbag unit 10.99 ‣ . . . 43
3.9 Removing and installing steering wheel ‣ 09.99 . . . 45
3.10 Removing and installing steering wheel 10.99 ‣ . . . 47
3.11 Removing and installing coil connector with slip ring ‣ 09.99 . . . 49
3.12 Removing and installing coil connector with slip ring 10.99 ‣ . . . 49
3.13 Removing and installing passenger side airbag unit ‣ 09.99 (without glove box) . . . 51
3.14 Removing and installing passenger side airbag unit ‣ 09.99 (with glove box) . . . 54
3.15 Removing and installing passenger side airbag unit 10.99 ‣ . . . 56
3.16 Removing and installing airbag control unit J234 . . . 58
3.17 Removing and installing driver and front passenger side airbag 10.99 ‣ . . . 59
3.18 Removing and installing sensor for driver/passenger side airbag 10.99 ‣ . . . 62

70 - Trim, insulation . . . 65

1 Dash panel . . . 65
1.1 Tools . . . 65
1.2 Removing and installing dash panel ‣ 09.99 . . . 66
1.3 Removing and installing dash panel 10.99 ‣ . . . 72

2 Door trims . . . 78
2.1 Tools . . . 78
2.2 Removing and installing front door trim ‣ 09.99 . . . 78
2.3 Removing and installing window crank ‣ 09.99 . . . 81
2.4 Removing and installing front door trim 10.99 ‣ . . . 81
2.5 Removing and installing window crank 10.99 ‣ . . . 84
2.6 Removing and installing rear door trim ‣ 09.99 . . . 84
2.7 Removing and installing rear door window crank ‣ 09.99 . . . 86
2.8 Removing and installing rear door trim 10.99 ‣ . . . 86
2.9 Removing and installing rear door window crank 10.99 ‣ . . . 89
2.10 Removing and installing door insulation film . . . 89

3 Trim . . . 94
3.1 Tools . . . 94
3.2 Removing and installing A-pillar trim . . . 94
3.3 Removing and installing B-pillar trim ‣ 09.99 . . . 95
3.4 Removing and installing B-pillar trim 10.99 ‣ . . . 97
3.5 Removing and installing upper C-pillar trim ‣ 09.99 . . . 99
3.6 Removing and installing upper C-pillar trim 10.99 ‣ . . . 101
3.7 Removing and installing lower C-pillar trim (4-door Polo) ‣ 09.99 . . . 103
3.8 Removing and installing lower C-pillar trim (4-door Polo) 10.99 ‣ . . . 104
3.9 Removing and installing side trim (2-door Polo) ‣ 09.99 . . . 105
3.10 Removing and installing side trim (2-door Polo) 10.99 ‣ . . . 105
3.11 Removing and installing support for right luggage compartment cover . . . 108
3.12 Removing and installing support for left luggage compartment cover 10.99 ‣ . . . 108
3.13 Removing and installing luggage compartment floor trim . . . 110
3.14 Removing and installing left luggage compartment side trim ‣ 09.99 . . . 111
3.15 Removing and installing left luggage compartment side trim 10.99 ‣ . . . 112
3.16 Removing and installing right luggage compartment side trim ‣ 09.99 . . . 113
3.17 Removing and installing right luggage compartment side trim 10.99 ‣ . . . 114
3.18 Removing and installing rear lock carrier cover ‣ 09.99 . . . 115
3.19 Removing and installing rear lock carrier cover 10.99 ‣ . . . 116
3.20 Removing and installing rear lid trim ‣ 09.99 . . . 117
3.21 Removing and installing rear lid trim 10.99 ‣ . . . 118

4 Roof trims . . . 119
4.1 Removing and installing moulded headlining ‣ 09.99 . . . 119

Protected by copyright. Copying for private or commercial purposes, in part or in whole, is not permitted unless authorised by Volkswagen AG. Volkswagen AG does not guarantee or accept any liability with respect to the correctness of information in this document. Copyright by Volkswagen AG.
satelettronica

4.2 Removing and installing moulded headlining 10.99 ▸ . . . 122
4.3 Removing and installing moulded headlining with sliding/tilting sunroof ▸ 09.99 . . . 125
4.4 Removing and installing moulded headlining with sliding/tilting sunroof 10.99 ▸ . . . 128

72 - Seat frames . . . 132

1 Front seats . . . 132
1.1 Tools . . . 132
1.2 Removing and installing seat ▸ 09.99 . . . 132
1.3 Removing and installing front seat 10.99 ▸ . . . 133
1.4 Removing and installing front seat with side airbag 10.99 ▸ . . . 135
1.5 Removing and installing backrest . . . 137
1.6 Assembly overview - seat frame (normal and sport seat) . . . 139
1.7 Assembly overview - backrest frame (normal and sport seat) . . . 141

2 Rear seats . . . 142
2.1 Removing and installing (split folding) bench seat and backrest . . . 142

74 - Seat - padding, covers . . . 144

1 Front seat covers and padding . . . 144
1.1 Tools . . . 144
1.2 Removing and installing front seat cover and padding . . . 144
1.3 Removing and installing front backrest cover and padding . . . 147

2 Seat heater elements . . . 150
2.1 Removing and installing seat heater element . . . 150
2.2 Removing and installing heater element for backrest . . . 150

3 Rear seat covers and padding . . . 152
3.1 Tools . . . 152
3.2 Removing and installing cover and padding for (one-piece) bench seat . . . 152
3.3 Removing and installing cover and padding for (one-piece) backrest . . . 153
3.4 Removing and installing covers and padding for (divided) bench seat . . . 154
3.5 Removing and installing covers and padding for (divided) backrest . . . 155

Protected by copyright. Copyright by Volkswagen AG.
Copyright by Volkswagen AG. Copying for private or commercial purposes, in part or in whole, is not permitted unless authorised by Volkswagen AG. Volkswagen AG does not guarantee or accept any liability with respect to the correctness of information in this document.
satelettronica

Protected by copyright. Copying for private or commercial purposes, in part or in whole, is not permitted unless authorised by Volkswagen AG. Volkswagen AG does not guarantee or accept any liability with respect to the correctness of information in this document. Copyright by Volkswagen AG.

satelettronica

68 – Interior equipment

1 Interior mirror

1.1 Removing and installing interior mirror

1.1.1 Removing

– Press interior rear-view mirror downward at an angle off retaining plate (spring clips in mirror base).

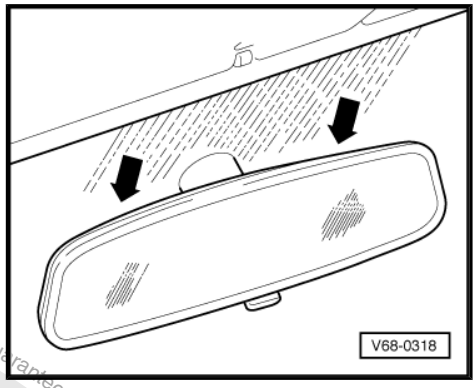

1.1.2 Installing

– When installing, push on mirror at 60... 90° angle to mounted position and rotate until locking spring clicks into place.

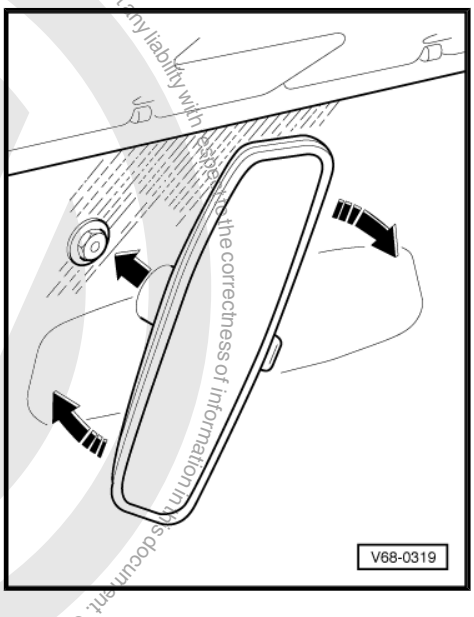

1.2 Bonding retaining plate for interior mirror

Materials

♦ Glass/metal bonding set -D 000 703 A1-

Protected by copyright. Copying for private or commercial purposes, in part or in whole, is not permitted unless authorised by Volkswagen AG. Volkswagen AG does not guarantee or accept any liability with respect to the correctness of information in this document. Copyright by Volkswagen AG.
satelettronica

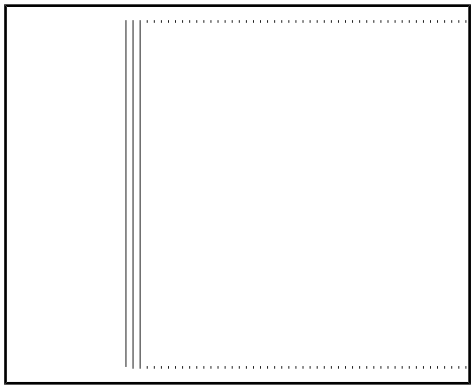

Tools

1 - Glass scraper (commercially available)

2 - Blade (commercially available)

Repair:

– Take mirror plate out from mirror base.

– Remove PUR adhesive from mirror plate with wire brush.

– Grind off the three spacer protrusions on bonding surface. To do this, use sandpaper (360/400 grain) laid on flat surface.

– Keep sanded surface clean and free of grease.

– Scrape down PUR adhesive material and primer down to ceramic layer on windscreen using glass scraper.

– Clean bonding area with adhesive remover -D 002 000 10- or cleaning solution -D 009 401 04- .

WARNING

Do not damage ceramic coating. Scratches will remain permanently visible.

– Cut nylon mesh fabric exactly to size of mirror base.

Note

Wear hand protection (rubber gloves).

– Apply adhesive evenly and smoothly to base of mirror.

– Fit nylon mesh fabric onto base of mirror.

– Apply further adhesive to nylon mesh fabric by dabbing with tube.

30 seconds are available for applying the adhesive to the nylon mesh fabric until pressing it onto the windscreen.

– Press base of mirror firmly (do not use force) against windscreen for 15 seconds.

– Remove excess adhesive with a cloth.

Note

Interior mirror can be installed after 15 minutes.

1.3 Automatic anti-dazzle interior mirror 10.99 ▸

1.3.1 Functional description

The automatic anti-dazzle interior mirror darkens continuously when the driver is blinded from behind.

It consists of a mirror element and electrics with two photo sensors.

Protected by copyright. Copying for private or commercial purposes, in part or in whole, is not permitted unless authorised by Volkswagen AG. Volkswagen AG does not guarantee or accept any liability with respect to the correctness of information in this document. Copyright by Volkswagen AG.

satelettronica

The photo sensors of the electronics detect the light incidence from the front and the rear.

If the light incidence is greater from the rear than from the front, the electronics apply voltage to the conductive coating.

The applied voltage changes the colour of the electrolyte. The greater the voltage, the darker the electrolyte. Therefore, the incident light is reflected to a lesser degree.

Selecting reverse gear switches off the anti-dazzle function. Consequently, one can, for example, reverse out of a dark garage with the aid of the interior mirror.

1.3.2 Assembly overview

1 - Interior mirror

- ❑ Testing function: switch on ignition. With reverse gear not engaged, cover photo sensor ⇒ Item 3 (page 3) and shine a hand torch at photo sensor ⇒ Item 2 (page 3) . The mirror must darken.

2 - Photo sensor

3 - Photo sensor

4 - Electronics

5 - Sheet of glass

6 - Electrolytic layer

7 - Silver reflecting coat

8 - Conductive coating

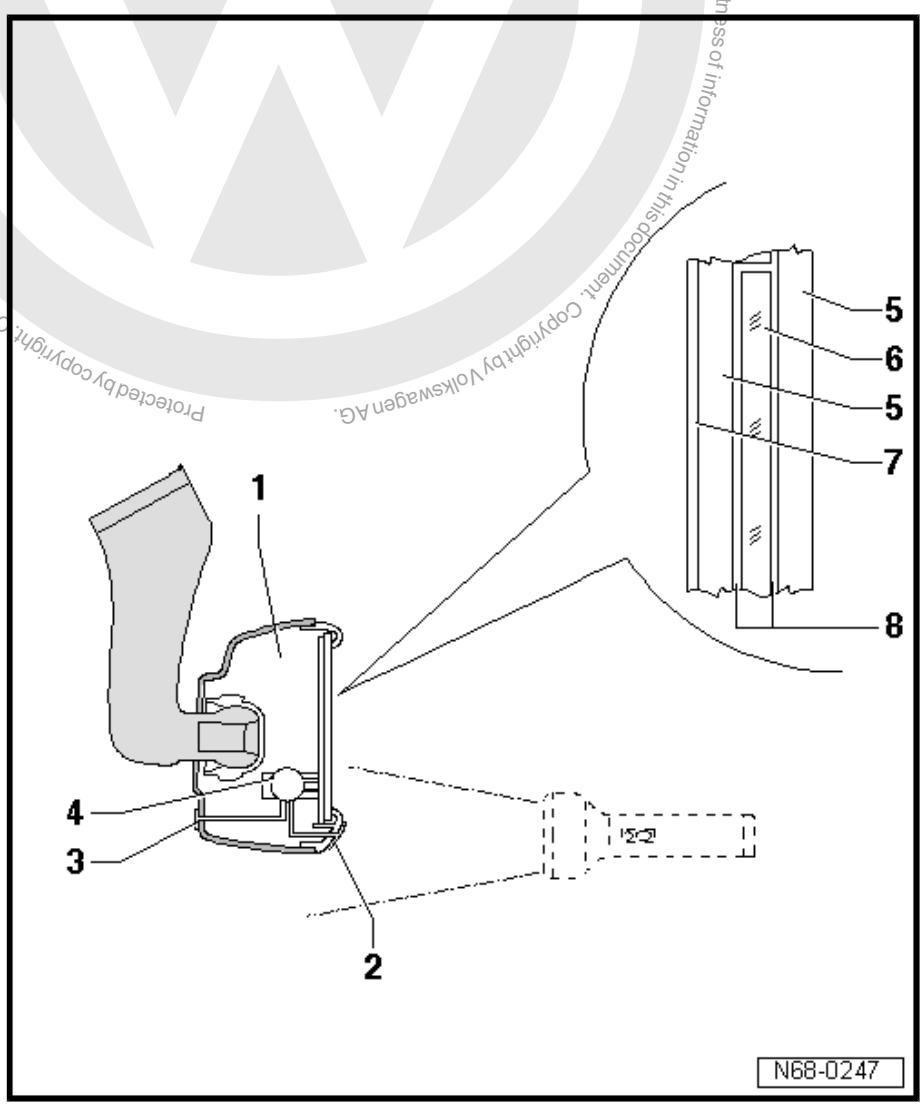

1.4 Removing and installing interior mirror (with rain sensor) 10.99 ▸

1.4.1 Removing

– Press left -1- and right -5- covers apart and remove.

– Pull connector -3- out of mirror base -4- and separate.

Protected by copyright. Copyright by Volkswagen AG.
satelettronica

– Pull mirror base -4- with mirror -6- downwards off retaining plate -2- -arrow-.

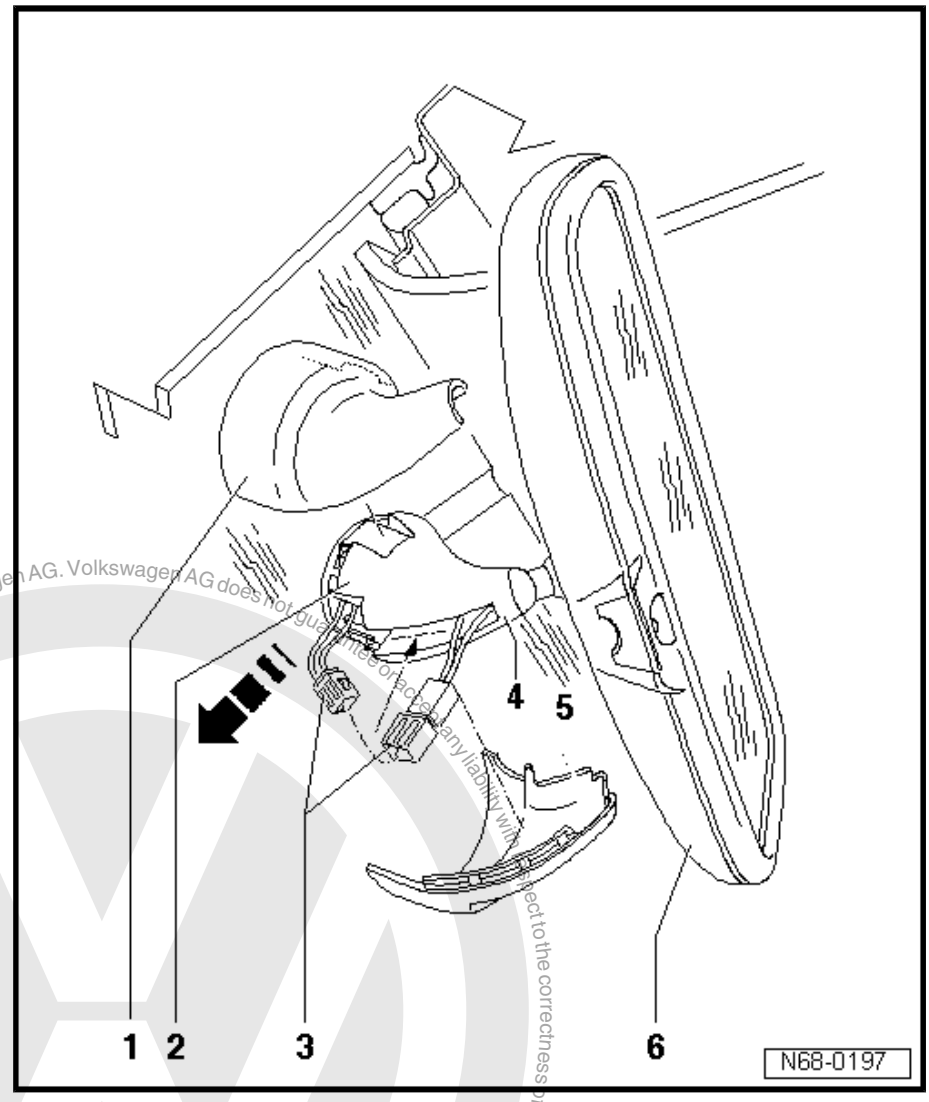

1.4.2 Installing

Installation is carried out in the reverse order.

1.5 Bonding on interior mirror base with rain sensor 10.99 ▸

The following repair procedure avoids the old procedure, renewing the windscreen.

At the same time, it is also possible to reuse the old mirror base which has fallen off.

1.5.1 Preparing windscreen

– All adhesive and primer residue must be removed from the ceramic pre-coating.

– Clean bonding area with cleaning solution -D 009 401 04- .

– Adhere to flash-off period of at least 10 minutes.

– Apply glass primer/paint primer -D 009 200 02- .

satelettronica

– Flash-off period up to bonding: minimum of 10 minutes to maximum of 1 hour.

1.5.2 Preparing detached or new mirror base

– Mechanically remove adhesive remains (applies only for a mirror base which has become detached).

– Prepare adhesive surface by sanding down with wet fine emery paper (800-1200 grade) until water does not run off surface to be bonded.

– Then clean with cleaning solution -D 009 401 04- .

1.5.3 Bonding mirror base

– Apply 2K polyurethane adhesive -D 180 KD2 A1- directly to sanded and cleaned mirror base bonding surface.

– Adhesive bead diameter: Approx. 2.5...3 mm.

– Press mirror base into position on prepared windscreen immediately after applying adhesive to base.

– Align mirror base in position on ceramic pre-coat surface and secure with adhesive tape.

1.5.4 Cleaning and removing excessive adhesive

– 0,5... Carefully remove adhesive tape after 0.5...1 hour after attaching mirror base.

– Remove excessive and still soft adhesive from around mirror base using a spatula.

– Then remove remaining excessive adhesive completely using a cloth or primer applicator soaked in cleaning solution.

1.5.5 Installing rain sensor and mirror

– Mirror can be fitted 2.5 hours after attaching mirror base.

Protected by copyright. Copying for private or commercial purposes, in part or in whole, is not permitted unless authorised by Volkswagen AG. Volkswagen AG does not guarantee or accept any liability with respect to the correctness of information in this document. Copyright by Volkswagen AG.
satelettronica

2 Compartments, covers and trims

2.1 Removing and installing centre console ▸ 09.99

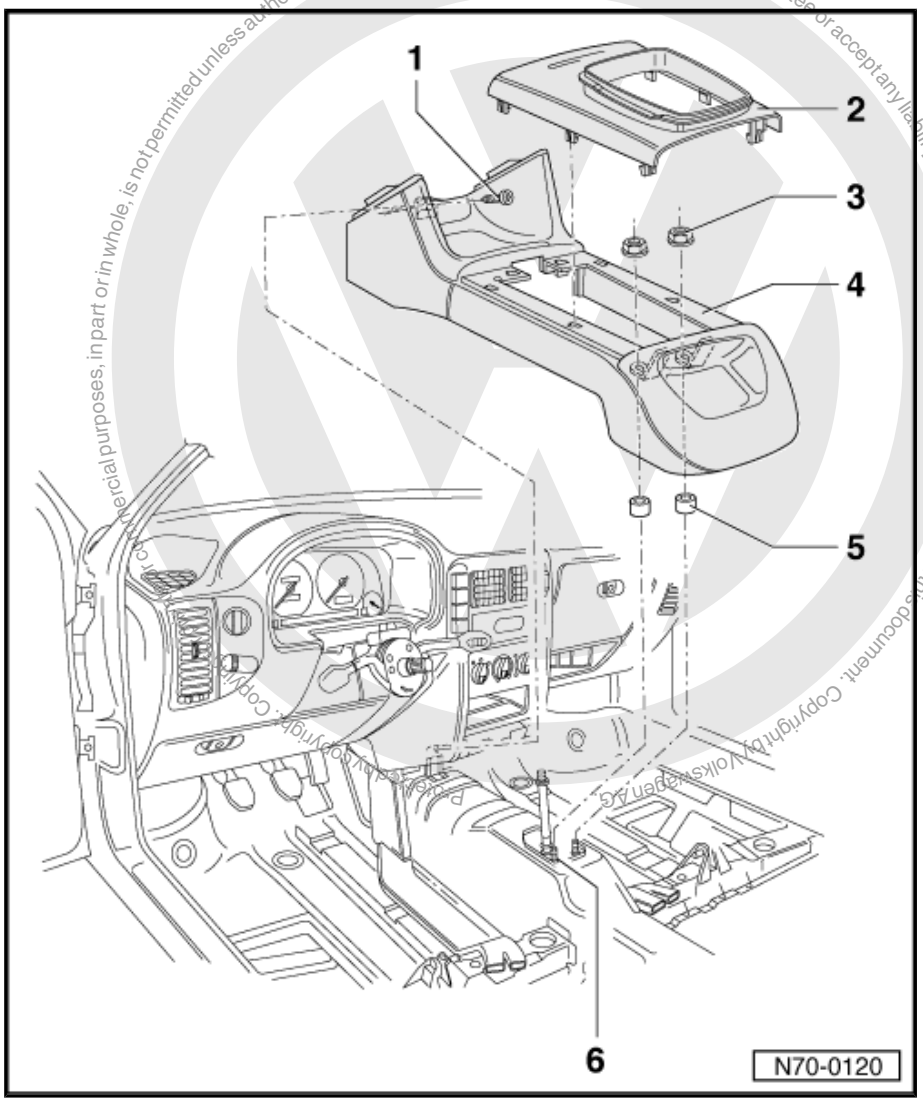

1 - Cross-head screw

- ❑ 1.5 Nm

2 - Cover

- ❑ Clipped.

3 - Hexagon nut

- ❑ 2 Nm

4 - Centre console

- ❑ Removing:
  - – Unclip cover ⇒ Item 2 (page 6) and take off upwards.
  - – Unscrew hexagon nuts ⇒ Item 3 (page 6) .
  - – Remove cross-head screw ⇒ Item 1 (page 6) .
  - – Lift rear of centre console from studs ⇒ Item 6 (page 6) and lift from gear lever.
- ❑ Installing:
  - – Place spacer sleeves ⇒ Item 5 (page 6) onto studs ⇒ Item 6 (page 6) .
  - – Insert centre console, secure with cross-head screw ⇒ Item 1 (page 6) and hexagon nuts ⇒ Item 3 (page 6) .

5 - Spacer sleeve

6 - Stud

2.2 Removing and installing centre console 10.99 ▸

Note

The removal and installation procedures may have to be modified slightly depending on equipment variants.

Volkswagen AG. Volkswagen AG does not guarantee or accept any liability with respect to the correctness of information in this document. Copyright by Volkswagen AG. Reproduction, in part or in whole, is not permitted unless authorised by Volkswagen AG for commercial purposes, in part or in whole, is not permitted unless authorised by Volkswagen AG.
satelettronica

Protected by copyright. Copying for private or commercial purposes, in part or in whole, is not permitted unless authorised by Volkswagen AG. Volkswagen AG does not guarantee or accept any liability with respect to the correctness of information in this document. Copyright by Volkswagen AG.

2.2.1 Removing

– Remove driver side storage compartment 10.99 ▸ ⇒ page 15.

Note

Selector lever knob and gaiter do not need to be removed in order to remove centre consol. Not shown in Figure to improve clarity.

– Unclip coin box -1-, left cover -3- and right cover -4-.
– Unclip trim -2-.
– Unclip frame for handbrake -5-.

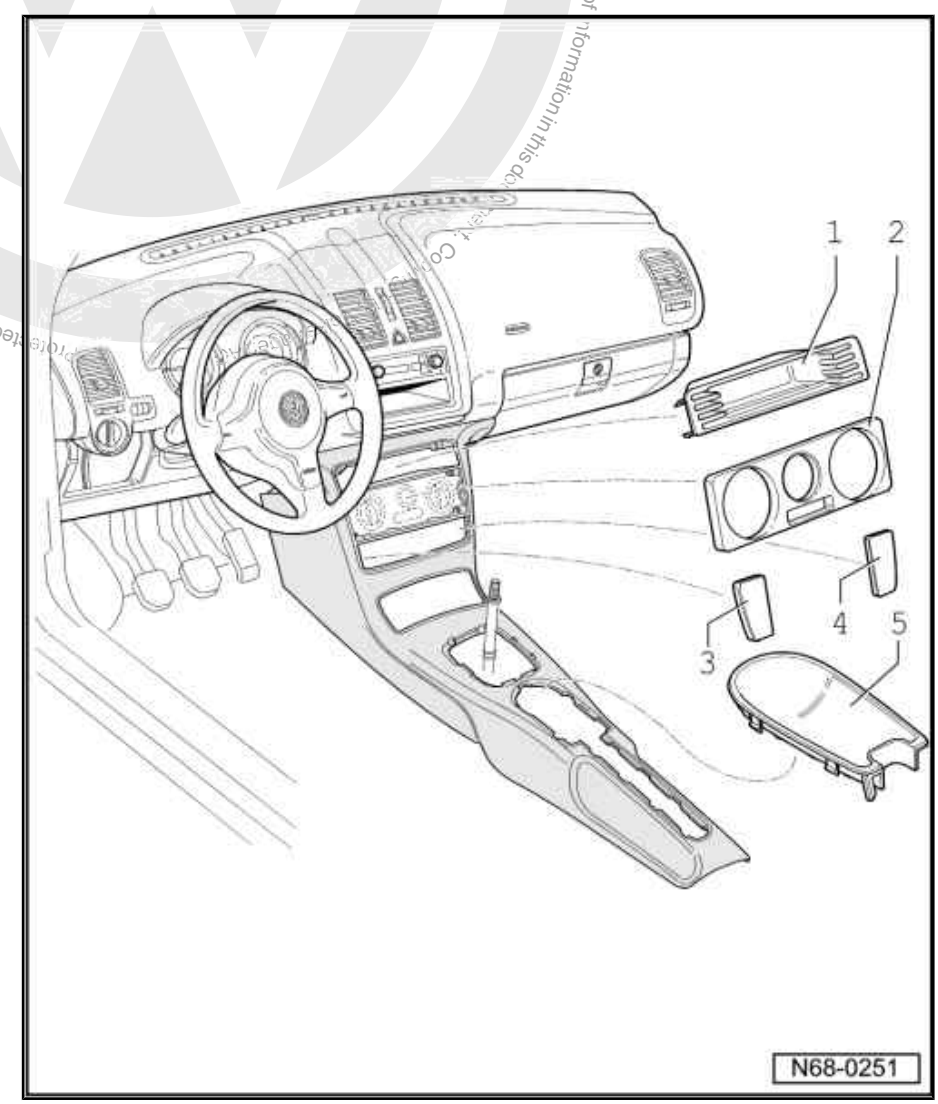

– Remove two screws -1-.
– Open glove compartment and unscrew screw -2-.
– Remove trim -3-.

satelettronica

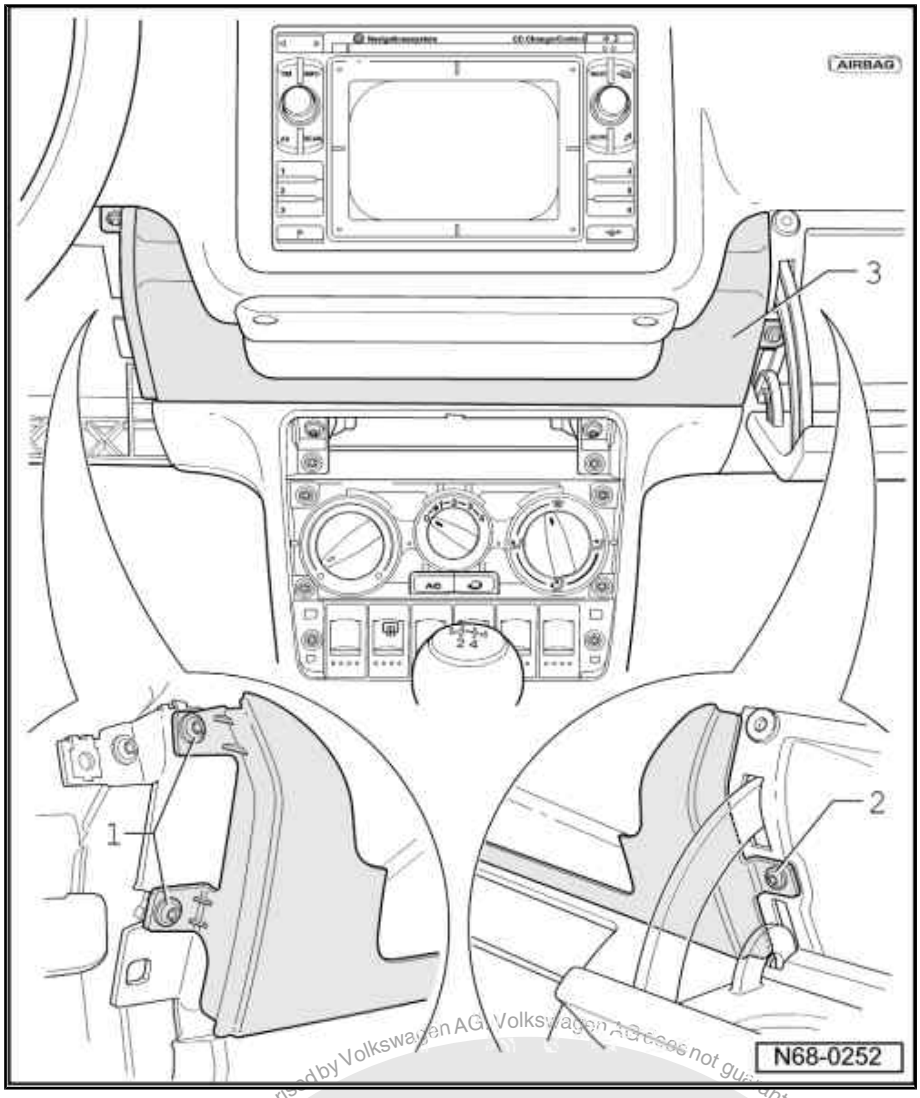

- Unscrew self-tapping screws -1- and -2- (3 each).
- Remove bolt -3-.
- Remove bolt -4-.
- Unscrew hexagon nuts -5-.

satelettronica
Protected by copyright. Copying for private or commercial purposes, in part or in whole, is not permitted unless authorised by Volkswagen AG. Volkswagen AG does not guarantee or accept any liability with respect to the correctness of information in this document. Copyright by Volkswagen AG.

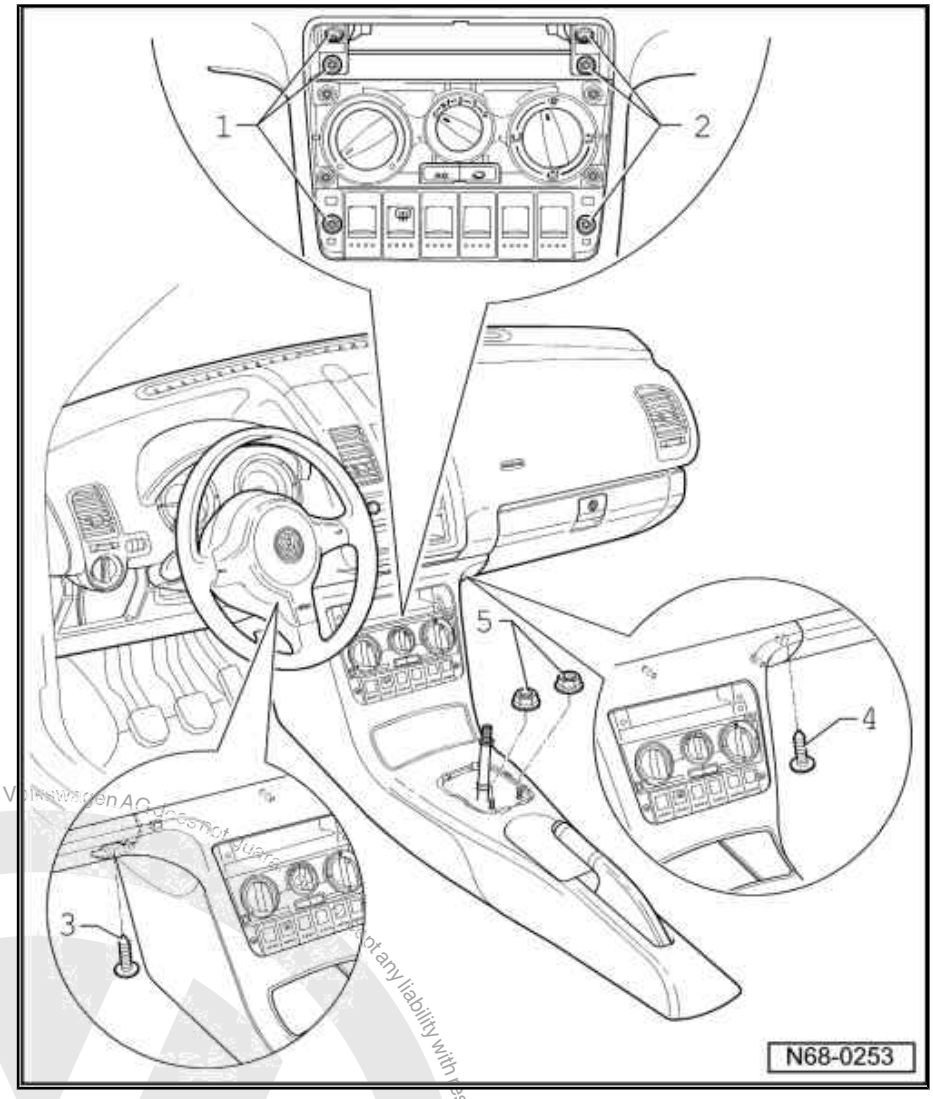

Note

Rear area of centre console -1- is secured to tunnel with a clip -4-.

– Unclip rear area of centre console -1- and swing up in -direction of arrow-.

– Unscrew screws -2- and remove ashtray -3- from centre console.

– Remove centre console.

Protected by copyright. Copying for private or commercial purposes, in part or in whole, is not permitted unless authorised by Volkswagen AG. Volkswagen AG does not guarantee or accept any liability with respect to the correctness of information in this document. Copyright by Volkswagen AG.
satelettronica

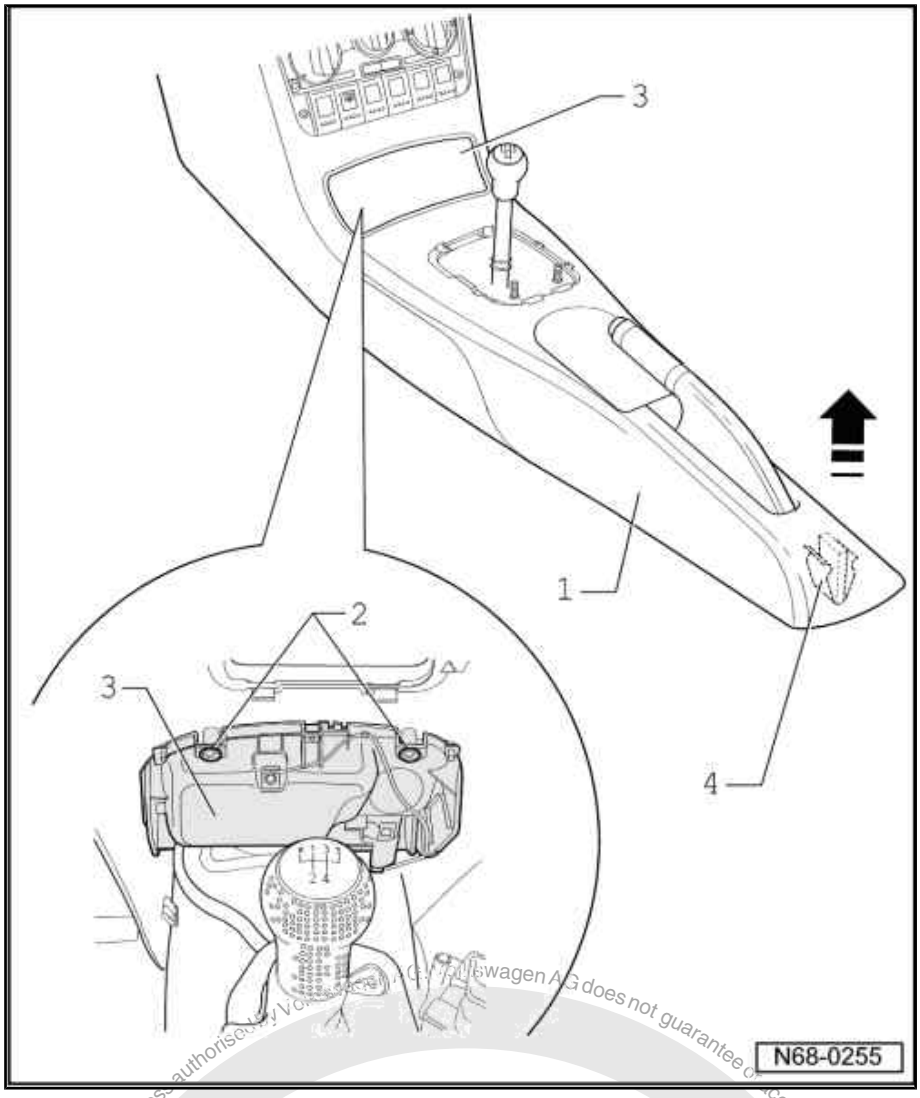

2.2.2 Installing

– Installation is carried out in reverse order of removal.

2.3 Removing and installing handbrake lever handle and trim ▸ 09.99

2.3.1 Removing

– Pull handbrake lever up.
– Lever out locking lug -arrow- with screwdriver.
– Pull off trim -1- and -2- from handbrake lever.
– Unclip locking lugs -4-.

Protected by copyright. Copying for private or commercial purposes, in part or in whole, is not permitted unless authorised by Volkswagen AG. Volkswagen AG does not guarantee or accept any liability with respect to the correctness of information in this document. Copyright by Volkswagen AG.
satelettronica

– Release guide -3- forwards from retaining lug -5- and take off upwards from handbrake lever.

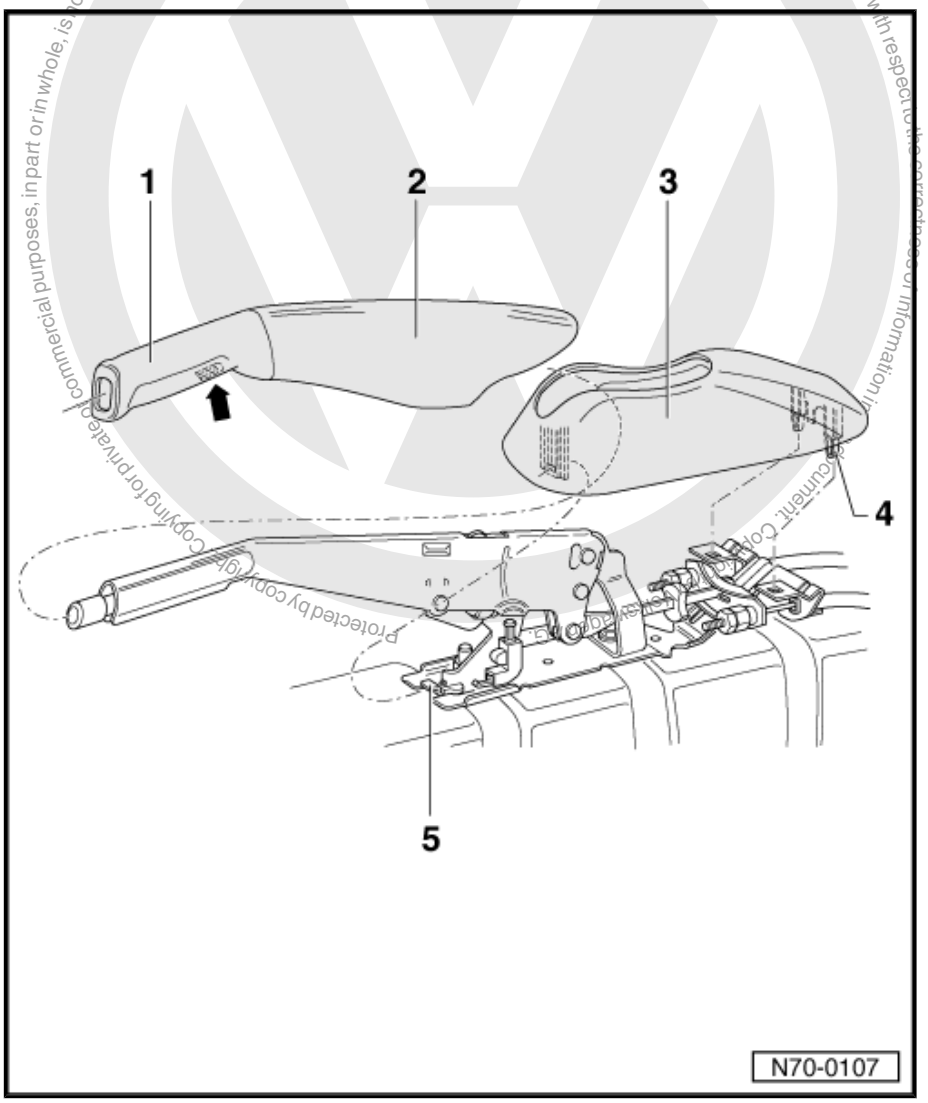

2.3.2 Installing

– Installation is carried out in reverse order of removal.

2.4 Removing and installing handbrake lever handle 10.99 ▸

2.4.1 Removing

– Pull handbrake lever up.

– Insert a small screwdriver into notch for lever and press in direction of handle -arrow A-.

Protected by copyright. Copying for private or commercial purposes, in part or in whole, is not permitted unless authorised by Volkswagen AG. Volkswagen AG does not guarantee or accept any liability with respect to the correctness of information in this document. Copyright by Volkswagen AG.
satelettronica

– Pull handle -1- off handbrake lever -2- -arrow B-.

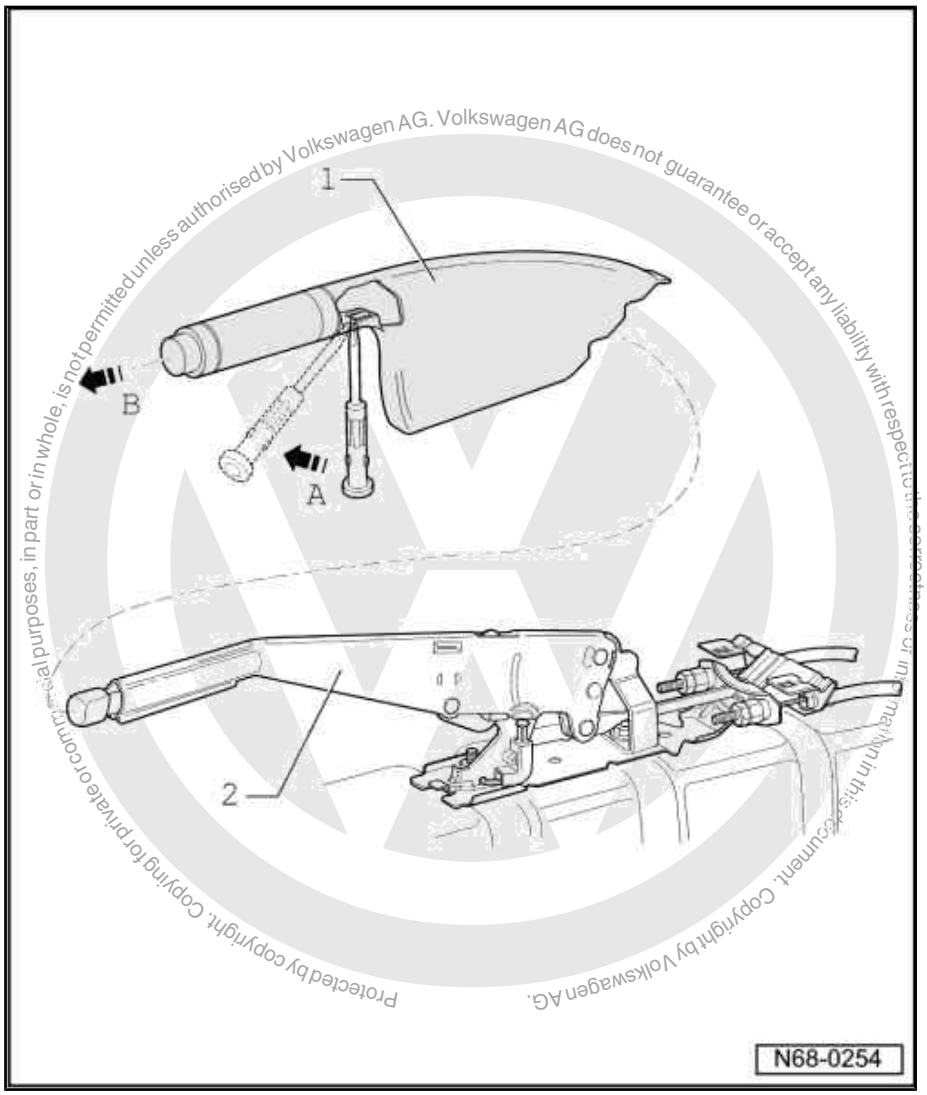

Protected by copyright. Copying for private or commercial purposes, in part or in whole, is not permitted unless authorised by Volkswagen AG. Volkswagen AG does not guarantee or accept any liability with respect to the correctness of information in this document. Copyright by Volkswagen AG.

satelettronica

2.4.2 Installing

– Installation is carried out in reverse order of removal.

2.5 Removing driver side storage compartment ▸ 07.97

1 - Storage compartment

2 - Latch

3 - Hinge

4 - Limit stop

❑ Removing:

– Open latch
⇒ Item 2 (page 13) .

– Push storage compartment
⇒ Item 1 (page 13) up until hinges
⇒ Item 3 (page 13) unhook.

– Pull storage compartment
⇒ Item 1 (page 13) off slightly in lower area and guide down out of dash panel with stops
⇒ Item 4 (page 13) .

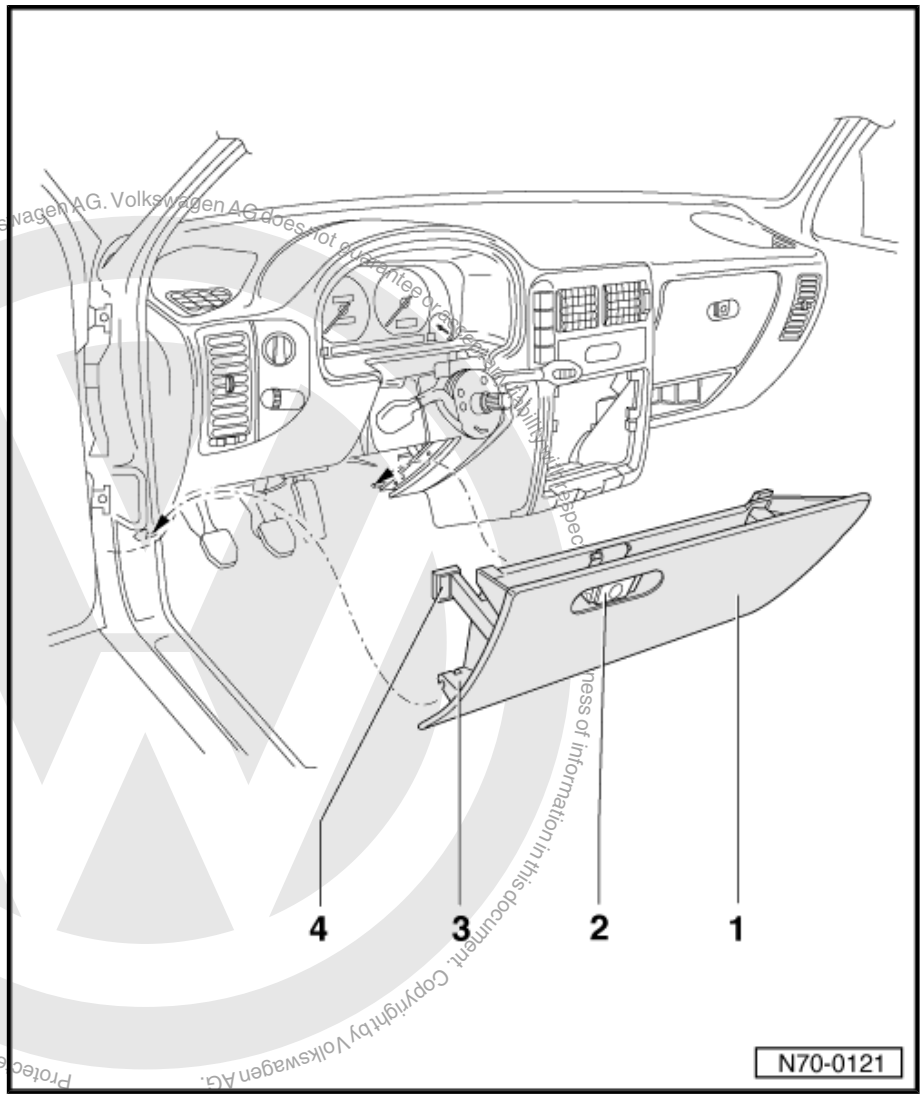

Protected by copyright. Copying for private or commercial purposes, in part or in whole, is not permitted unless authorised by Volkswagen AG. Volkswagen AG does not guarantee or assume any liability with respect to the correctness of information in this document. Copyright by Volkswagen AG.
satelettronica

2.6 Removing driver side storage compartment 08.97 ▸ 09.99

1 - Storage compartment

- ❑ Removing:
- – Remove screws ⇒ Item 3 (page 14) (4 in total) and remove storage compartment .

2 - Cover

3 - Bolt

- ❑ Qty. 4

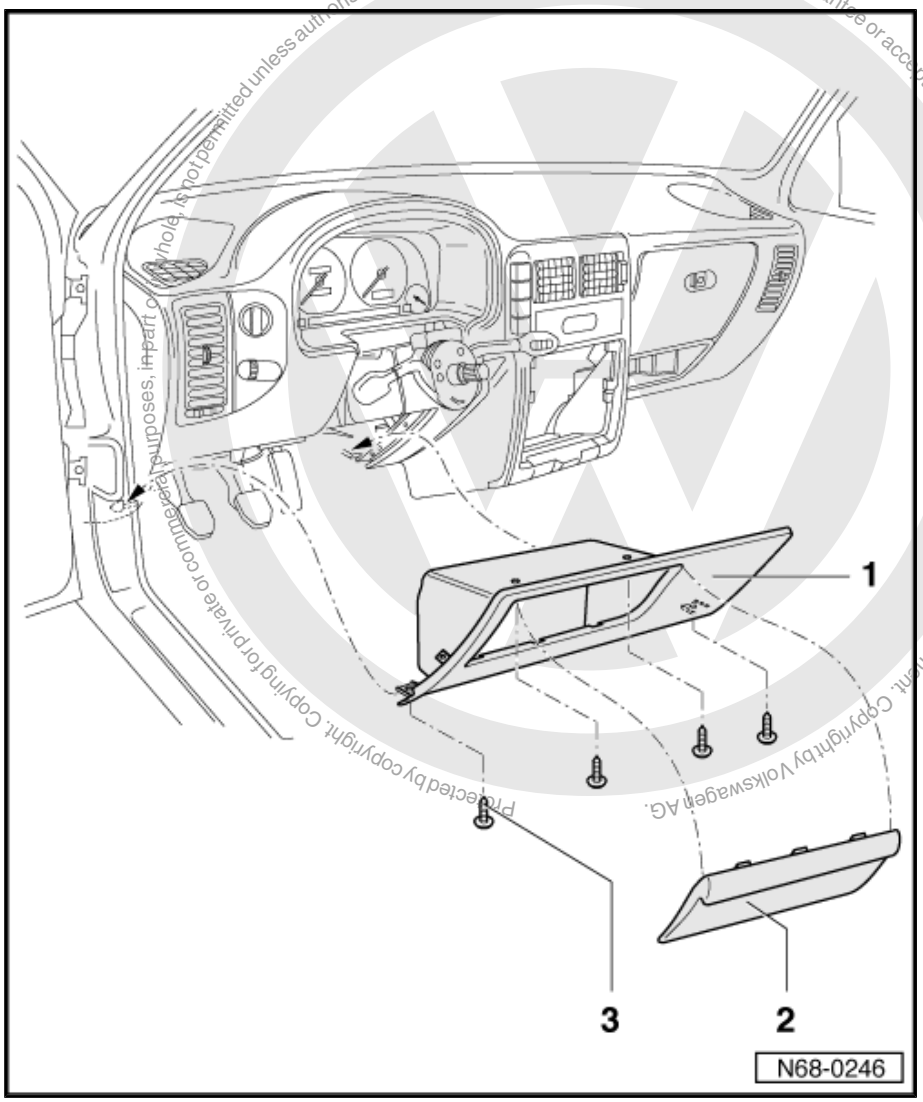

Protected by copyright. Copying for private or commercial purposes, in part or whole, is not permitted unless authorised by Volkswagen AG. Volkswagen AG does not guarantee or accept any liability with respect to the correctness of information in this document. Copyright by Volkswagen AG.
satelettronica

2.7 Removing and installing driver side storage compartment 10.99 ▸

2.7.1 Removing

– Release steering wheel height adjustment -1-.
– Move steering wheel to highest position.
– Remove bolts -arrows-.
– Take off lower steering column switch trim -2-.

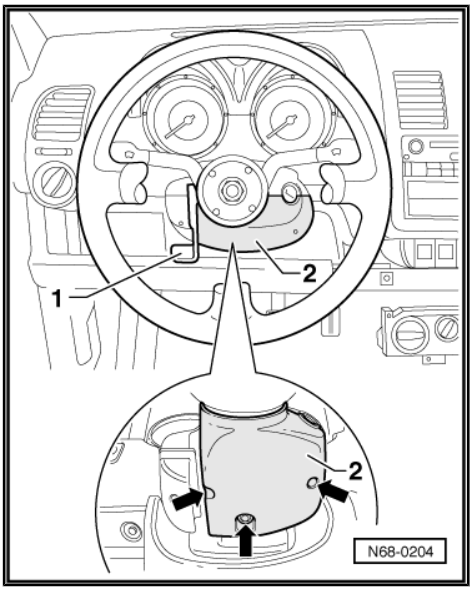

– Remove bolt -1-.
– Take off cover -2-.
– Remove screws (6 in total) -arrows-.
– Remove driver's side storage compartment -3-.

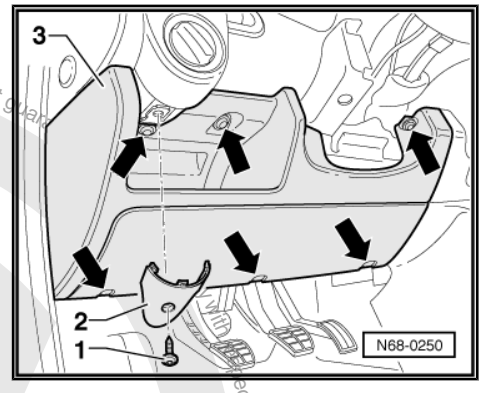

2.7.2 Installing

– Installation is carried out in reverse order of removal.

Protected by copyright. Copying for private or commercial purposes, in part or in whole, is not permitted unless authorised by Volkswagen AG. Volkswagen AG does not guarantee or accept any liability with respect to the correctness of information in this document. Copyright by Volkswagen AG.
satelettronica

2.8 Removing and installing footwell cover on driver side

2.8.1 Removing

– Remove cross-head bolts -arrows-.
– Remove driver's footwell cover.

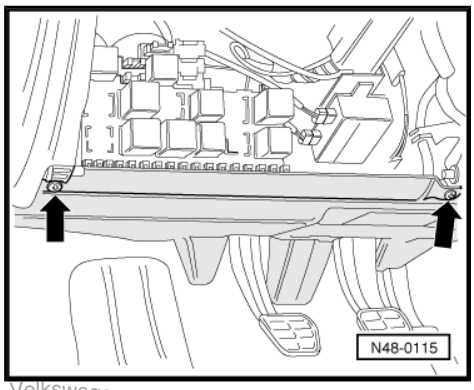

2.8.2 Installing

– Installation is carried out in reverse order of removal.

2.9 Removing and installing glove box ▸ 09.99

2.9.1 Removing

Vehicles without passenger airbag

– Open glove box.
– Remove cross-head bolts -arrows-.
– Pull glove box with storage compartment out of dash panel.

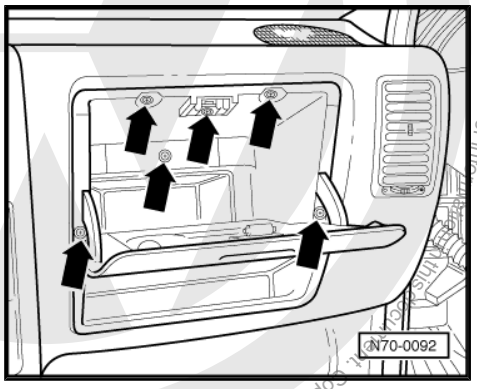

Vehicles with passenger airbag

– Open glove box.
– Pull trim under glove box -1- down.
– Grip behind dash panel with hand -arrow A-.

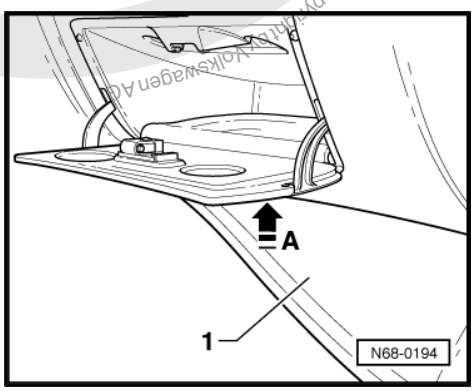

Protected by copyright. Copying for private or commercial purposes, in part or in whole, is not permitted unless authorised by Volkswagen AG. Volkswagen AG does not guarantee or accept any liability with respect to the correctness of information.
Copyright by Volkswagen AG
satelettronica

– Release front tabs on felt insert and press out of mounting bracket -arrows-.
– Push felt insert up with hand and then pull out forwards.

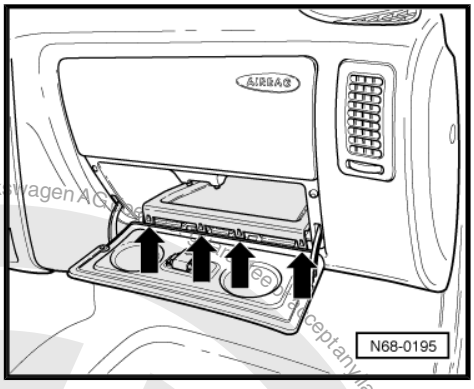

– Remove Torx screws -arrows-.
– Remove glove box.

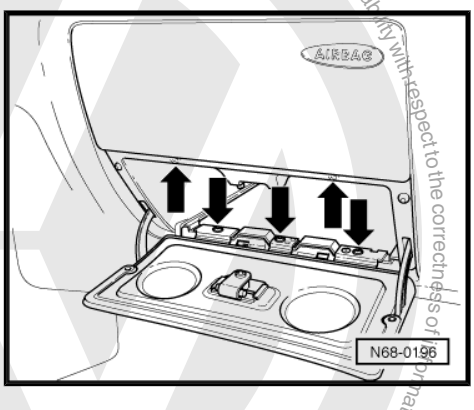

2.9.2 Installing

– Installation is carried out in reverse order of removal.

2.10 Removing and installing glove box 10.99 ▸

2.10.1 Removing

– Remove driver side storage compartment 10.99 ▸ ⇒ page 15 .
– Remove centre console 10.99 ▸ ⇒ page 6 .
– Remove three screws -arrows-.
– Open glove box.

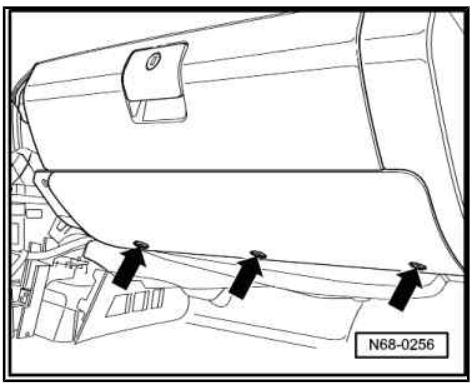

Protected by copyright. Copyright by Volkswagen AG. Volkswagen AG does not accept any liability with respect to the correctness of information in this document. Copyright by Volkswagen AG. Protected by copyright. Copying for private or commercial purposes, in part or in whole, is not permitted unless authorised by Volkswagen AG.
satelettronica

– Remove the three screws -1-.
– Unscrew stop buffers -2- and -3-.

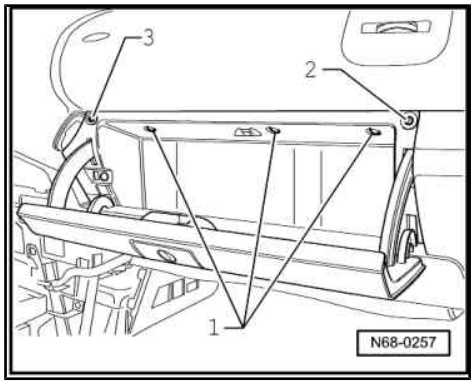

– Remove three screws -arrows-.
– Remove glove box.

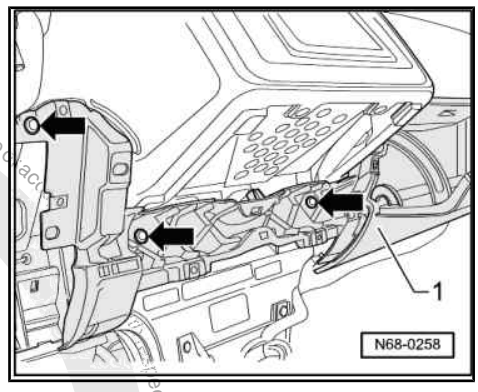

2.10.2 Installing

– Installation is carried out in reverse order of removal.

2.11 Removing and installing passenger side storage compartment ▸ 09.99

2.11.1 Removing

– Remove cross-head bolts -arrows-.
– Pull front passenger side compartment out of dash panel.

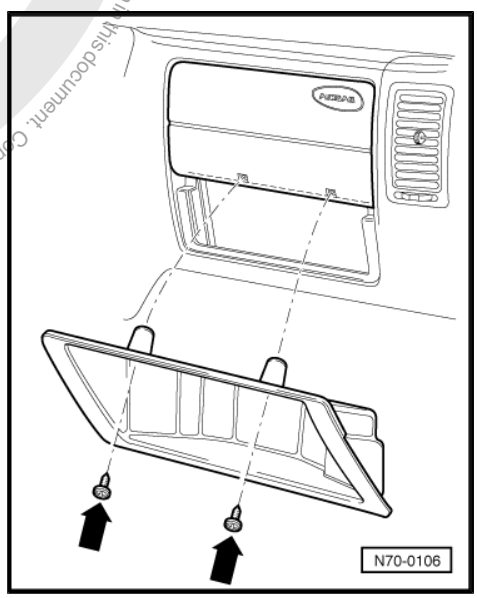

2.11.2 Installing

– Installation is carried out in reverse order of removal.

Protected by copyright. Copying for private or commercial purposes, in part or in whole, is not permitted unless authorised by Volkswagen AG. Volkswagen AG does not guarantee or accept any liability with respect to the correctness of information in this document. Copyright by Volkswagen AG.
satelettronica

2.12 Removing trim for dash panel insert ▸ 09.99

2.12.1 Removing

– Remove cross-head bolts -arrows-.
– Pull out trim for dash panel insert.

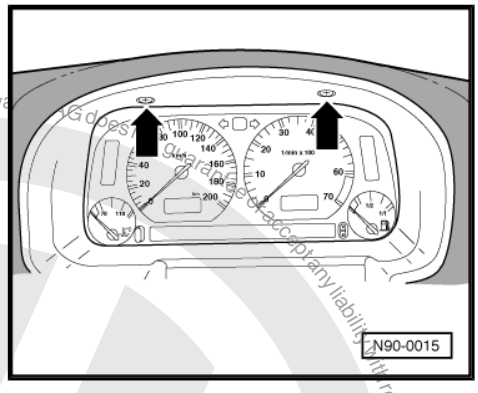

2.12.2 Installing

– Installation is carried out in reverse order of removal.

2.13 Removing trim for instrument cluster 10.99 ▸

2.13.1 Removing

– Remove bolt -1-.
– Unclip upper part of instrument trim panel -2- in -direction of arrow-.

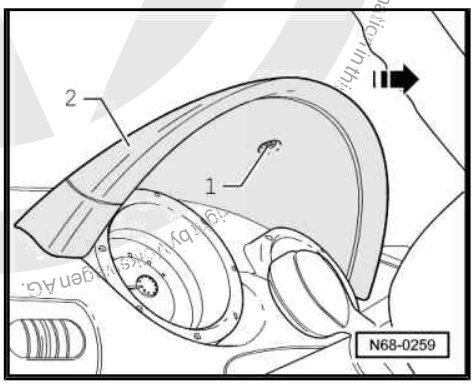

– Remove three screws -arrows-.
– Remove instrument trim panel -1-.

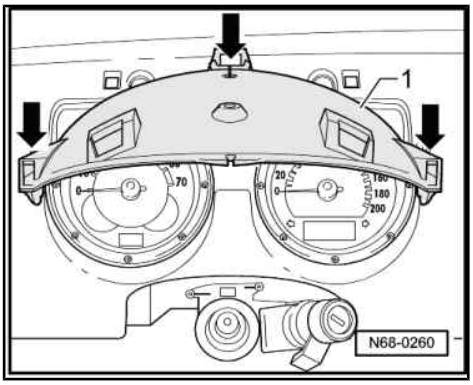

2.13.2 Installing

– Installation is carried out in reverse order of removal.

Protected by copyright. Copying for private or commercial purposes, in part or in whole, is not permitted unless authorised by Volkswagen AG. Volkswagen AG does not guarantee or accept any liability with respect to the correctness of information in this document.
satelettronica

Protected by copyright. Copying for private or commercial purposes, in part or in whole, is not permitted unless authorised by Volkswagen AG. Volkswagen AG does not guarantee or accept any liability with respect to the correctness of information in this document. Copyright by Volkswagen AG.

2.14 Removing sun visor

2.14.1 Removing

– Unscrew sun visor -1- and sun visor support -2- (turn sun visor support 90° to remove) and disconnect electrical connections for mirror lighting.

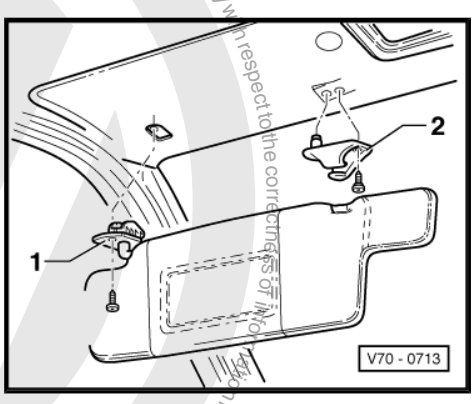

2.14.2 Installing

– Installation is carried out in reverse order of removal.

2.15 Removing centre sun visor 10.99 ▸

2.15.1 Removing

– Lower middle sun visor -1- -arrow-.

– Remove self-tapping screw -2- from roof cross member -3- and remove sun visor.

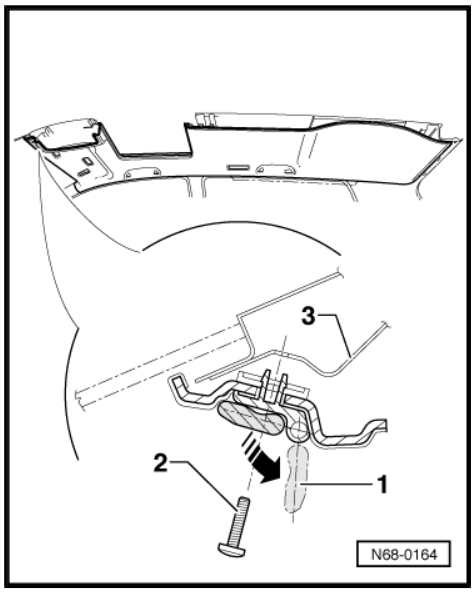

2.15.2 Installing

– Installation is carried out in reverse order of removal.

satelettronica

3 Grab handles

3.1 Removing and installing grab handle (roof) ▸ 09.99

3.1.1 Removing

– Fold grab handle -1- down.
– Lever covers -2- up using screwdriver and fold open.
– Unscrew cross-head screws -3- and take off handle-1-.

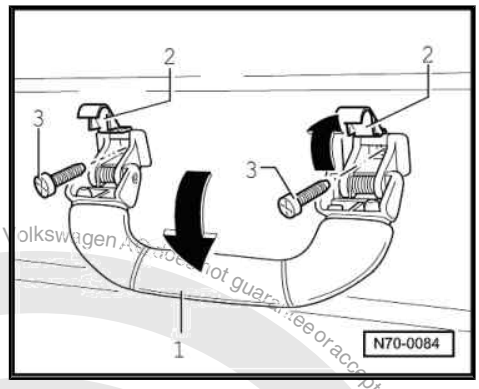

3.1.2 Installing

– Installation is carried out in reverse order of removal.

3.2 Removing grab handle (roof) 10.99 ▸

3.2.1 Removing

– Fold grab handle -1- down.
– Lever covers -2- up using screwdriver and fold open.
– Unscrew cross-head screws -3- and take off handle-1-.

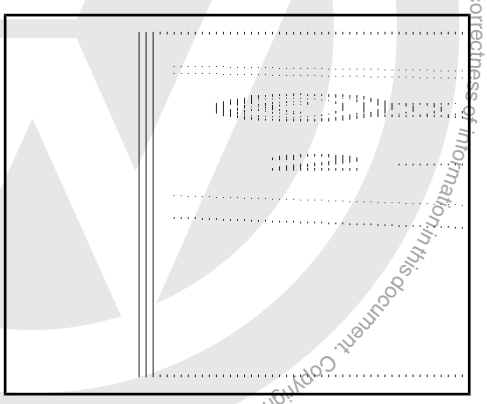

3.2.2 Installing

– Installation is carried out in reverse order of removal.

Protected by copyright. Copying for private or commercial purposes, in part or in whole, is not permitted unless authorised by Volkswagen AG. Volkswagen AG does not guarantee or accept any liability with respect to the correctness of information in this document. Copyright by Volkswagen AG.
satelettronica

4 Sill panel trims

4.1 Removing and installing sill panel trim

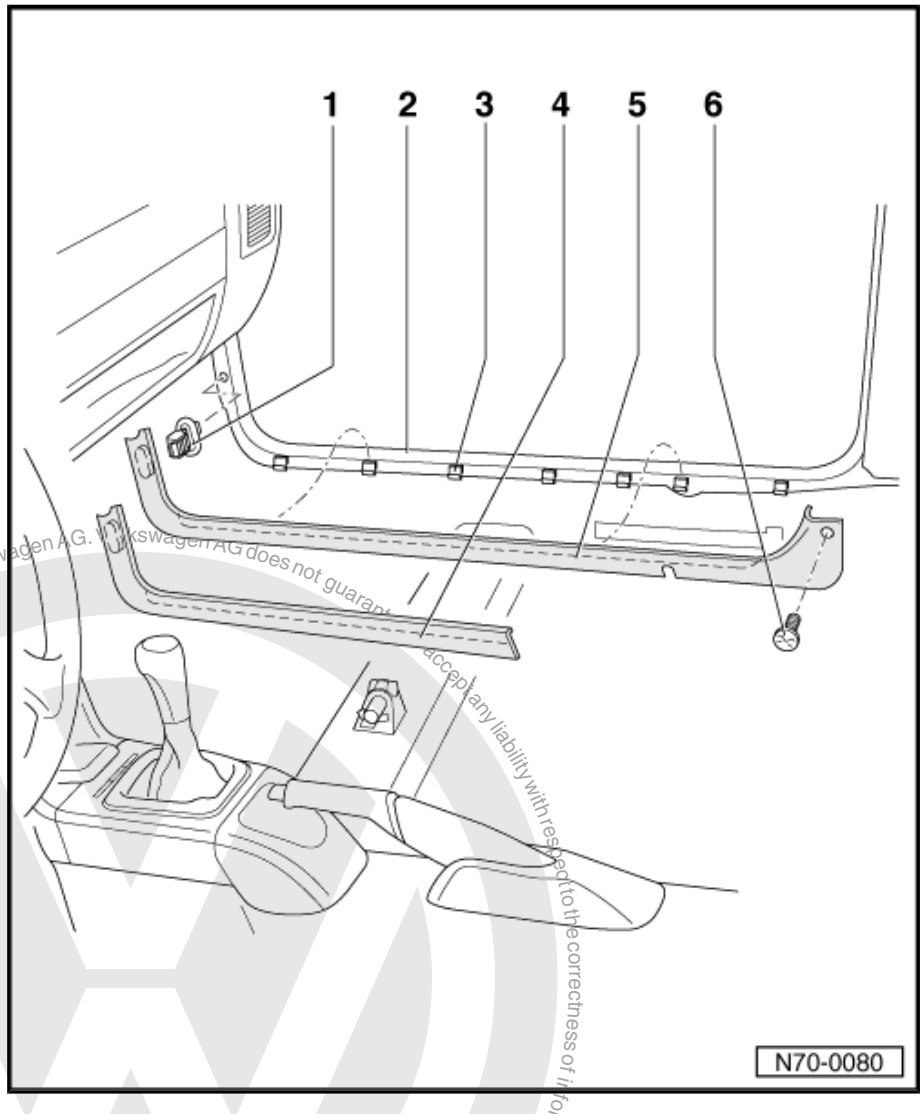

1 - Clip

- ❑ Removing:
- – Turn clip 90° and pull out of mounting.

2 - Seal

- ❑ After installing trims, ensure seal is seated correctly.

3 - Clip

4 - Four-door Polo sill panel trim.

- ❑ Removing:
- – Unclip front sill panel trim from clip ⇒ Item 1 (page 22) and pull up out of clips ⇒ Item 3 (page 22).

5 - Two-door Polo sill panel trim.

- ❑ Removing:
- – Remove cross-head screw ⇒ Item 6 (page 22) .
- – Unclip front sill panel trim from clip ⇒ Item 1 (page 22) and pull up out of clips ⇒ Item 3 (page 22) .

6 - Cross-head screw

- ❑ 1.2 Nm

Protected by copyright. Copying for private or commercial purposes, in part or in whole, is not permitted unless authorised by Volkswagen AG. Volkswagen AG does not guarantee or accept any liability with respect to the correctness of information in this document. Copyright by Volkswagen AG.
satelettronica

69 – Passenger protection

1 Seat belts

1.1 Safety regulations for belt tensioners

- Testing, removing, installing and repair work may only be performed by qualified personnel.
- Belt tensioner components may be neither opened nor repaired; always use new parts (danger of accident).
- Belt tensioner units which have received hard blows or been dropped on the floor must not be installed in vehicles.
- Belt tensioner units which are mechanically damaged (dents, fractures) always must be renewed.
- Storage and transportation are subject to laws governing explosive substances.
- Belt tensioner unit must be installed immediately after removal from its packaging.
- No tools with impact action may be used to remove the belt tensioner.
- If work is interrupted, the belt tensioner unit must be returned to its packaging.
- Leaving the belt tensioner unit unattended is prohibited.
- The belt tensioner unit must not be treated with grease, cleaning or similar substances, nor may it be exposed to temperatures above 100 °C, even for short periods.
- The pyrotechnic propellant has no expiration date; i.e. it has unlimited, maintenance-free life.

Protected by copyright. Copying for private or commercial purposes, in part or in whole, is not permitted unless authorised by Volkswagen AG. Volkswagen AG does not guarantee or accept any liability with respect to the correctness of information in this document. Copyright by Volkswagen AG.

1.2 Disposal of belt tensioner units

- Non-triggered belt tensioner units with a pyrotechnical charge must, according to national legislation, be disposed of correctly in the original packaging. If in doubt, contact your distribution centre or importer for details.
- Used belt tensioner units can be disposed of via commercial waste disposal.

1.3 Checking belt tensioner

– Unreel seat belt webbing.

If the belt webbing can still be unrolled or rolled up on a triggered mechanical belt tensioner, rattling noises can be clearly heard.

If an electric belt tensioner has been triggered, a fault will be saved in the airbag fault memory.

If a belt tensioner has been triggered, the entire seat belt must be renewed.

sateletronica

1.4 Removing and installing front seat belts with belt tensioner ▸ 09.99

Protected by copyright. Copying for private or commercial purposes, in part or in whole, is not permitted unless authorised by Volkswagen AG. Volkswagen AG does not guarantee or accept any liability with respect to the correctness of information in this document.

WARNING

Before commencing separating, straightening and panel beating work the belt tensioning units must be removed.

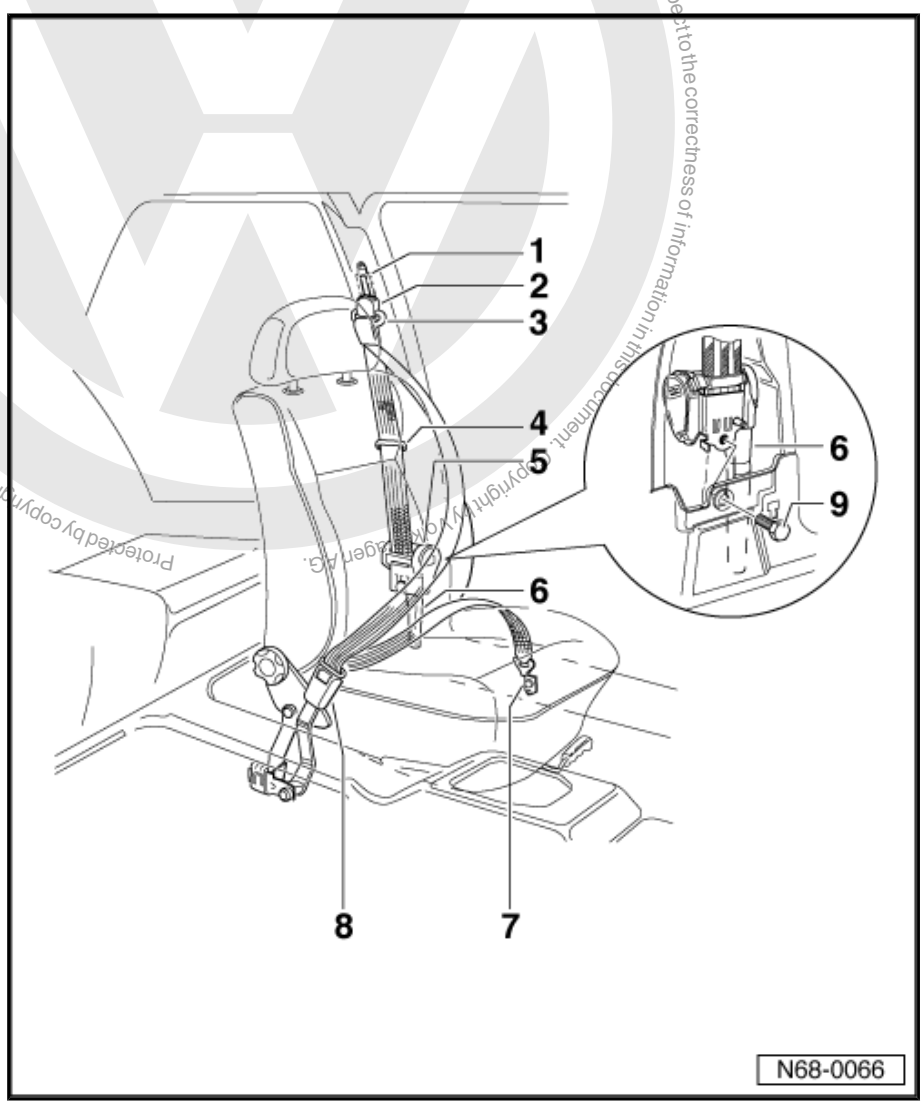

1 - Belt height adjustment

- ❑ Remove belt height adjustment ⇒ page 26 .

2 - Cover

- ❑ Clipped on.

3 - Belt anchor

4 - Belt guide

- ❑ Secured with 2 cross-head screws.
- ❑ 1.5 Nm

5 - Belt reel

- ❑ To remove belt reel, trim on upper and lower B-pillar (in 2-door vehicles, side trim) must first be removed ⇒ page 105 .
- ❑ Retaining lugs determine position of belt reel.

6 - Tensioner unit

- ❑ Part of seat belt.
- ❑ Loosening the hexagon bolt ⇒ Item 9 (page 24) makes the belt tensioner safe and the opposite returns the belt tensioner to a functional condition.

7 - Front fitting

- ❑ Removing ⇒ page 27

8 - Front seat belt buckle

- ❑ Removing ⇒ page 28

9 - Hexagon head bolt

- ❑ Loosening the hexagon bolt makes the belt tensioner safe and the opposite returns the belt tensioner to a functional condition.
- ❑ 40 Nm

satelettronica

1.5 Removing and installing front seat belts with belt tensioner 10.99 ▸

> ⚠ **WARNING**
>
> ***Before commencing separating, straightening and panel beating work the belt tensioning units must be removed.***

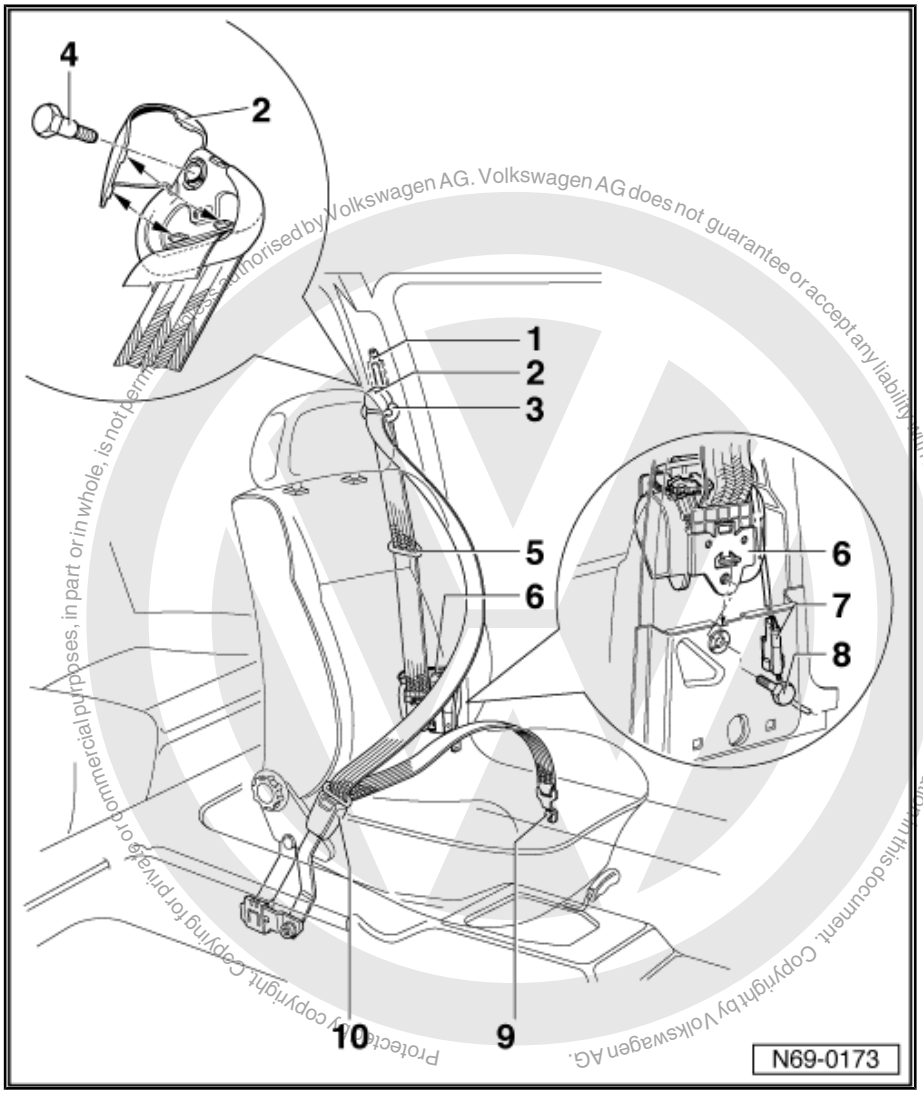

1 - Belt height adjustment
- ❑ Removing ⇒ page 27

2 - Cover

3 - Belt anchor

4 - Bolt
- ❑ 40 Nm

5 - Belt guide
- ❑ Secured with 2 cross-head screws.
- ❑ 1.5 Nm

6 - Belt reel
- ❑ Either of two different belt tensioners may be installed: an electrical belt tensioner in vehicles with side airbags or a mechanical belt tensioner in vehicles without side airbag.
- ❑ To remove belt reel, trim on upper and lower B-pillar (in 2-door vehicles, side trim) must first be removed ⇒ page 105 .
- ❑ Retaining lugs determine position of belt reel.

7 - Connector
- ❑ Only with electric belt tensioners

8 - Hexagon head bolt
- ❑ Loosening the hexagon bolt makes the belt tensioner safe and the opposite returns the belt tensioner to a functional condition.
- ❑ 40 Nm

9 - Front fitting
- ❑ Removing ⇒ page 27

10 - Front seat belt buckle
- ❑ Removing ⇒ page 28

Protected by copyright. Copying for private or commercial purposes, in part or in whole, is not permitted unless authorised by Volkswagen AG. Volkswagen AG does not guarantee or accept any liability with respect to the correctness of information in this document. Copyright by Volkswagen AG.
satelettronica

1.6 Removing and installing belt height adjustment ▸ 09.99

1 - Belt height adjustment actuator

- ❑ Removing:
- – Release locking lugs ⇒ Item 2 (page 26) and pull off cover.

2 - Locking lugs

3 - Bolt

- ❑ 40 Nm

4 - Slide

5 - Socket head bolt

- ❑ 23 Nm

6 - Belt height adjustment

- ❑ To remove front height adjustment mechanism, trim on upper B-pillar must first be removed.

7 - Seat belt with belt anchor

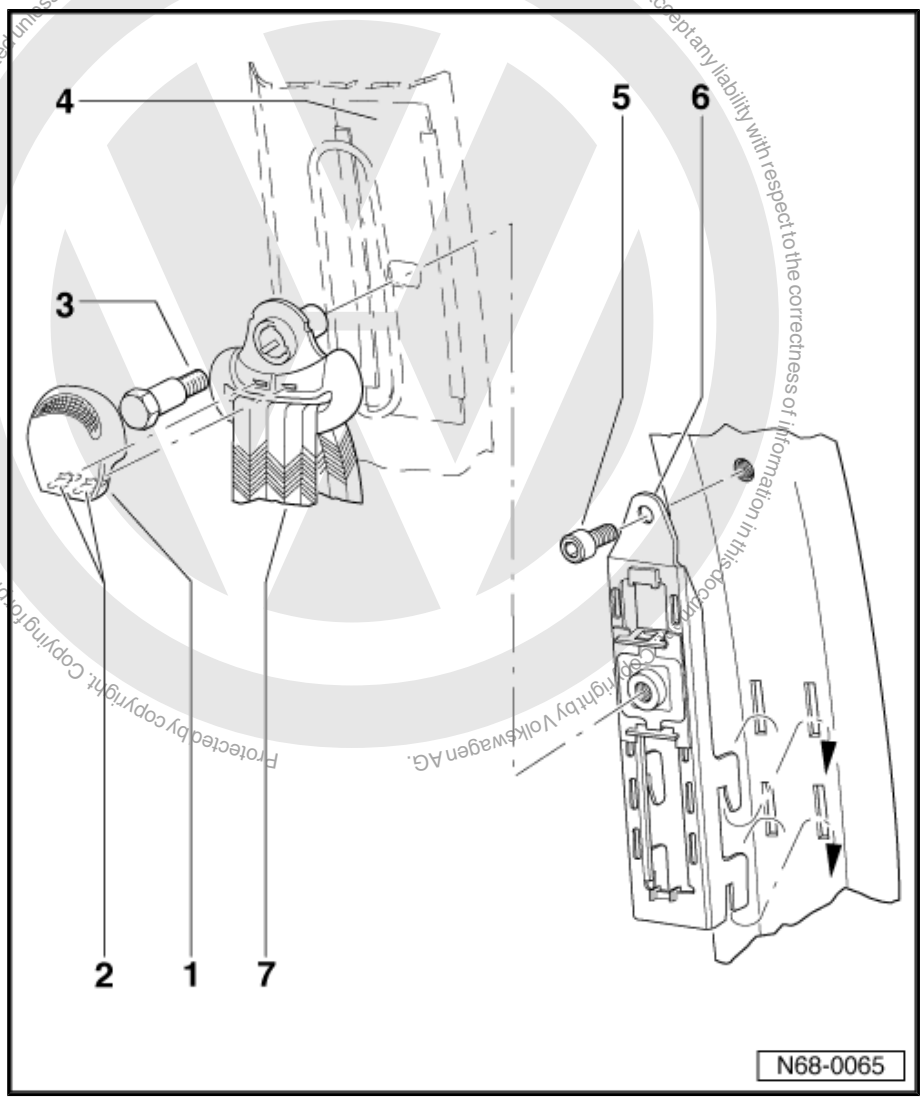

Protected by copyright. Copying for private or commercial purposes, in part or in whole, is not permitted unless authorised by Volkswagen AG. Volkswagen AG does not guarantee or accept any liability with respect to the correctness of information in this document. Copyright by Volkswagen AG.
satelettronica

1.7 Removing and installing belt height adjustment 10.99 ▸

1 - Belt height adjustment actuator

- ❑ Removing:
- – Release locking lugs ⇒ Item 2 (page 27) and pull off cover.

2 - Locking lugs

3 - Bolt

- ❑ 40 Nm

4 - Slide

5 - Socket head bolt

- ❑ 23 Nm

6 - Belt height adjustment

- ❑ To remove front height adjustment mechanism, trim on upper B-pillar must first be removed.

7 - Seat belt with belt anchor

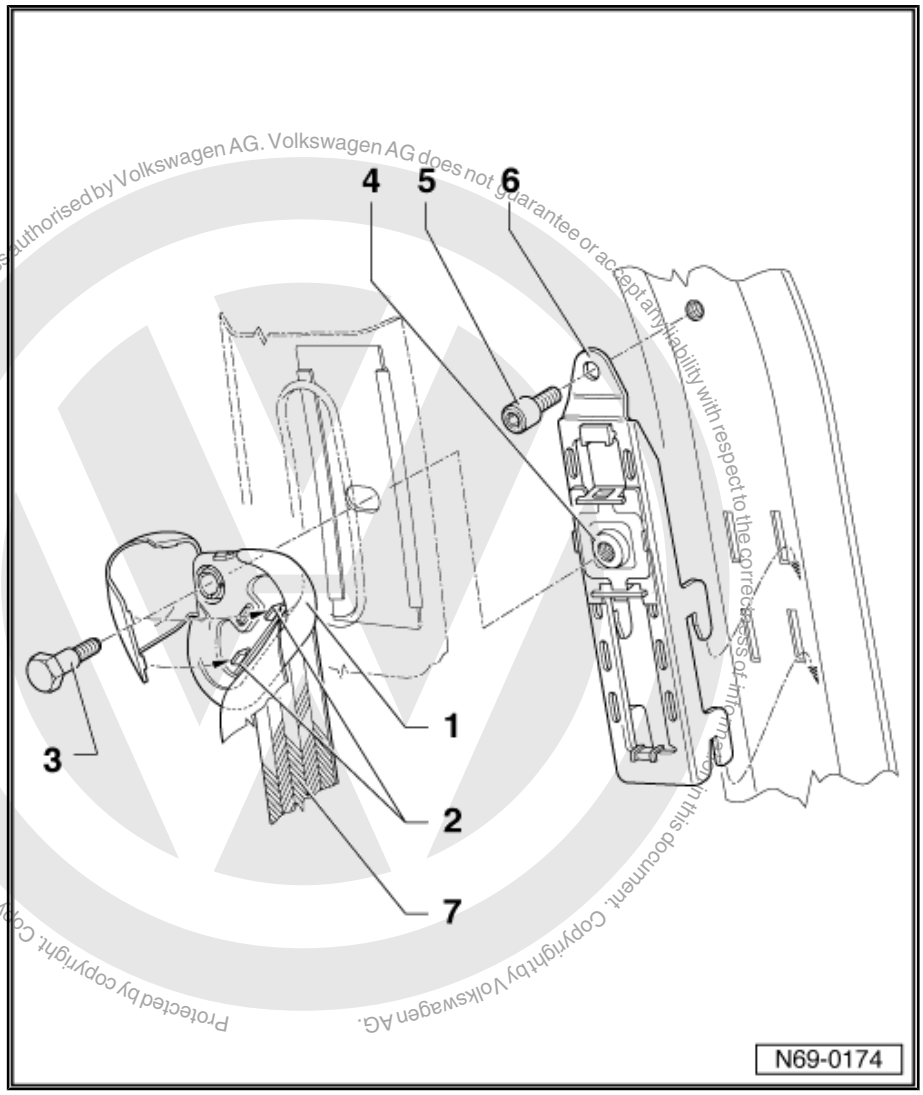

1.8 Removing and installing front fitting (2-door)

1.8.1 Removing

– Remove side trim ⇒ page 105 .

1 - Hexagon head bolt 40 Nm

2 - Eyelet cap

3 - Anchor rail

4 - Socket head bolt (covered by carpet) 23 Nm

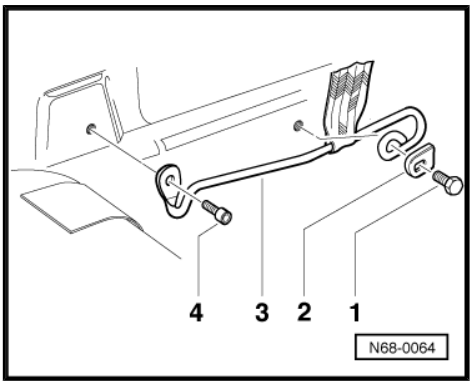

Protected by copyright. Copying for private or commercial purposes, in part or whole, is not permitted unless authorised by Volkswagen AG. Volkswagen AG does not guarantee or accept any liability with respect to the correctness of information in this document. Copyright by Volkswagen AG.
satelettronica

1.8.2 Installing

– Installation is carried out in reverse order of removal.

1.9 Removing and installing front fitting (4-door)

1.9.1 Removing

– Remove lower B-pillar trim ⇒ page 95 .

1 - Hexagon head bolt 40 Nm

2 - Seat belt -note securing pin (arrow- when installing

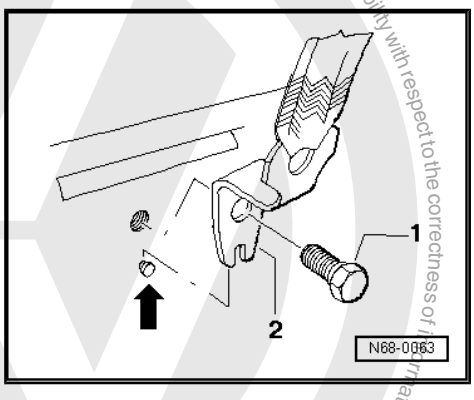

1.9.2 Installing

– Installation is carried out in reverse order of removal.

1.10 Removing and installing front belt buckle

1.10.1 Removing

1 - Front seat belt buckle

2 - Hexagon bolt 40 Nm

3 - Clip (slide)

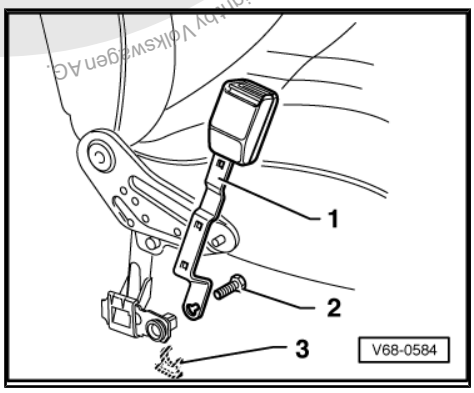

1.10.2 Installing

– Installation is carried out in reverse order of removal.

1.11 Removing and installing rear seat belts

Protected by copyright. Copyright by Volkswagen AG. Volkswagen AG does not guarantee or accept any liability with respect to the correctness of information in this document. Copyright by Volkswagen AG. Volkswagen AG. Volkswagen AG, is not permitted unless authorised by Volkswagen AG. Volkswagen AG does not guarantee or accept any liability with respect to the correctness of information in this document. Copyright by Volkswagen AG.
satelettronica

1 - Belt reel
- ❑ Removing ⇒ page 29

2 - Belt anchor
- ❑ Removing ⇒ page 29

3 - Belt webbing

4 - Rear fitting

5 - Latch plate

6 - Lap belt
- ❑ Removing ⇒ page 31

7 - Double buckle
- ❑ Hexagon bolt 40 Nm ⇒ page 31 .

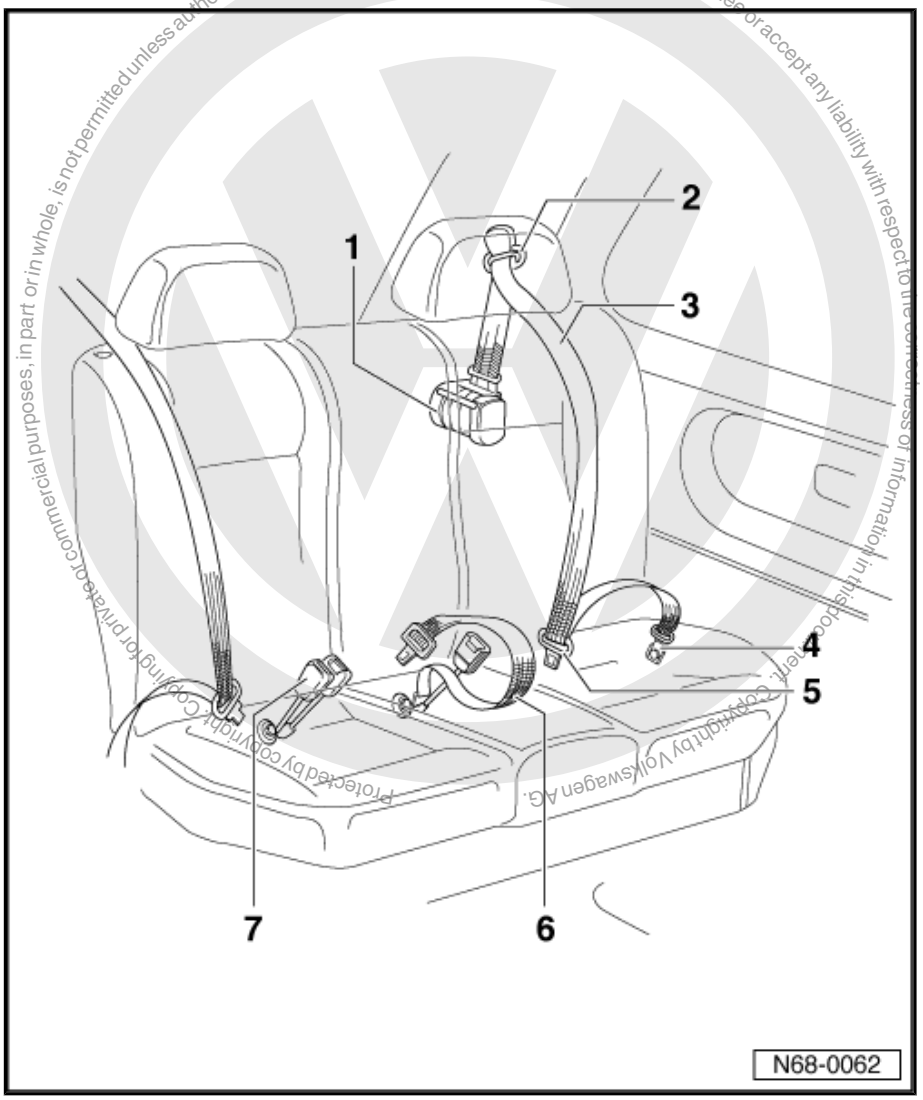

1.12 Removing and installing belt reel ▸ 09.99

To remove, the wheel house trim, the lateral support for the rear shelf and the C-pillar trim must be removed.

Volkswagen AG. Volkswagen AG does not guarantee or accept any liability with respect to the correctness of information in this document. Copyright by Volkswagen AG. Protected by copyright. Copying for private or commercial purposes, in part or in whole, is not permitted unless authorised by Volkswagen AG.
satelettronica

1 - Belt reel

- ❑ Locating stud ⇒ Item 7 (page 30) serves to position -arrow- belt reel.

2 - Cover

- ❑ Removing: release locking lugs and pull off cover.

3 - Bolt

- ❑ 40 Nm

4 - Belt anchor

5 - Spring washer

6 - Spacer ring

7 - Locating stud

8 - Hexagon head bolt

- ❑ 40 Nm

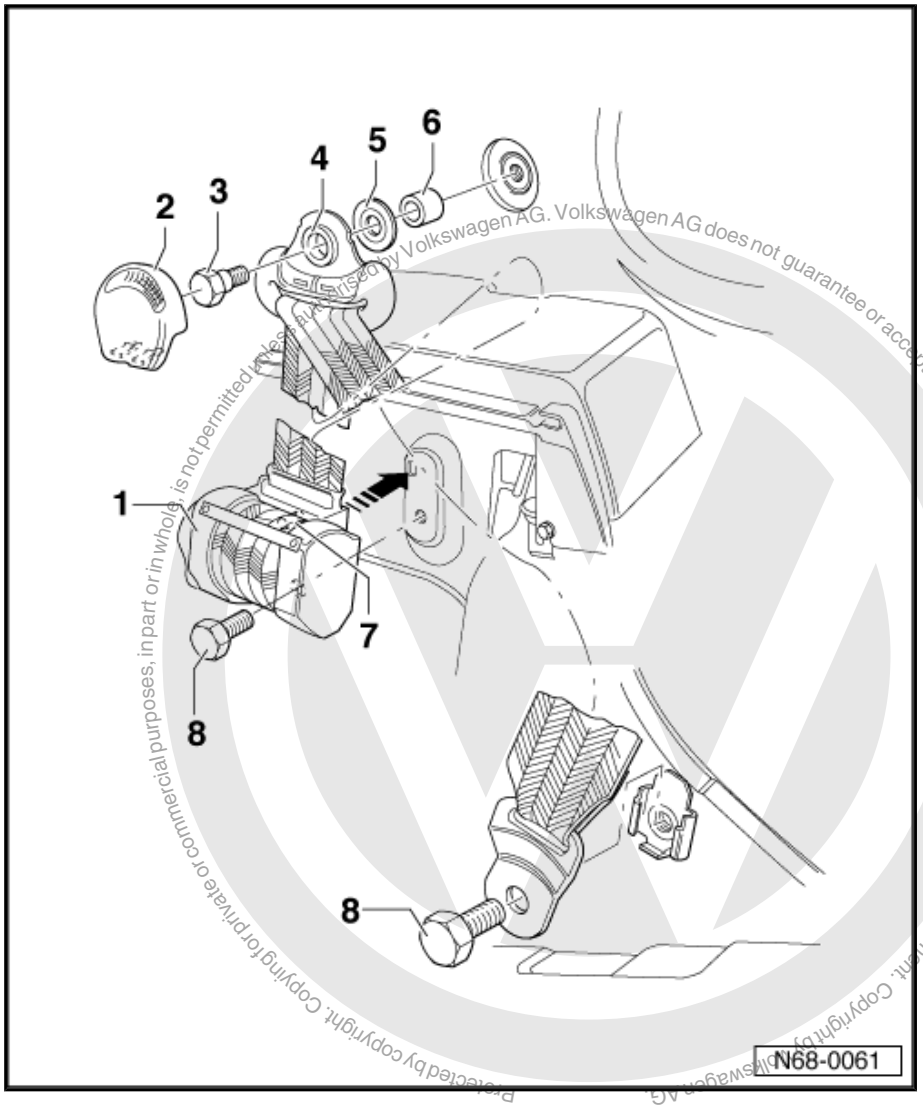

1.13 Removing and installing belt reel 10.99

▸

To remove, the wheel house trim, the lateral support for the rear shelf and the C-pillar trim must be removed.

Protected by copyright. Copying for private or commercial purposes, in part or in whole, is not permitted unless authorised by Volkswagen AG. Volkswagen AG does not guarantee or accept any liability with respect to the correctness of information in this document. Copyright by Volkswagen AG.
satelettronica

1 - Belt reel
- ❑ Locating stud ⇒ Item 7 (page 30) serves to position -arrow- belt reel.

2 - Cover
- ❑ Opening: release locking lugs and pull off cover.

3 - Bolt
- ❑ 40 Nm

4 - Belt anchor

5 - Spring washer

6 - Spacer ring

7 - Locating stud

8 - Hexagon head bolt
- ❑ 40 Nm

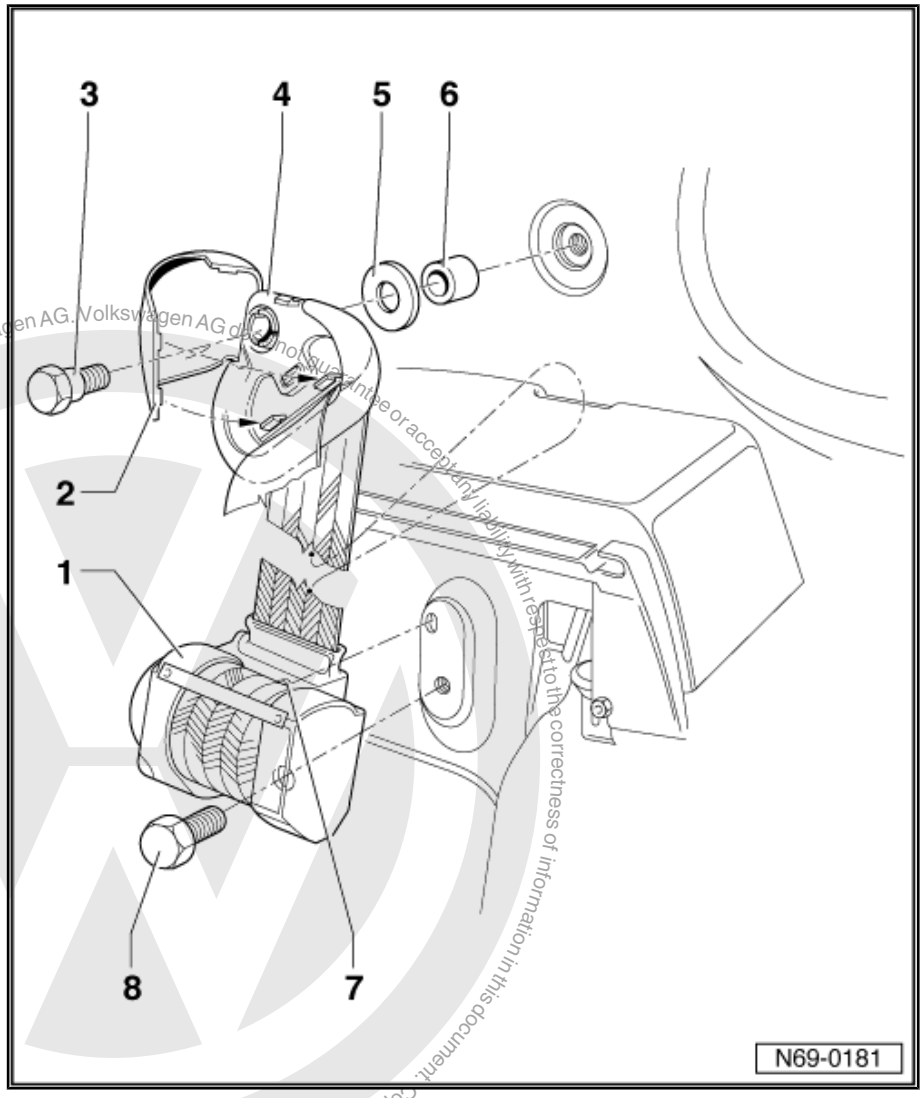

1.14 Removing and installing lap belt and double buckle

1.14.1 Removing

1 - Hexagon bolt 40 Nm

2 - Cover

3 - Lap belt

4 - Double buckle

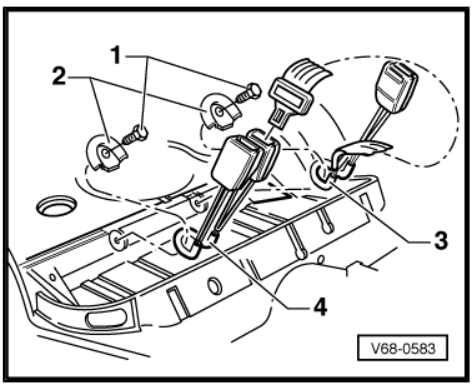

1.14.2 Installing

– Installation is carried out in reverse order of removal.

satelettronica

2 Inspecting seat belts

WARNING

The seat belt system must be inspected systematically after every accident! If damage is determined at any of the points to be checked, customer must be informed regarding necessity of changing belts.

Check points:

- Checking belt webbing
- Checking inertia reel (locking mechanism)
- Visually checking belt buckle
- Checking operation of belt buckle
- Checking belt anchors, belt guides and latch plates
- Checking securing parts and anchorage points

2.1 Points to check

2.1.1 Checking belt webbing

– Pull belt webbing completely out of inertia reel.

– Inspect belt straps for soiling and, if necessary, wash with mild soap solution ⇒ also refer to Owner's Manual.

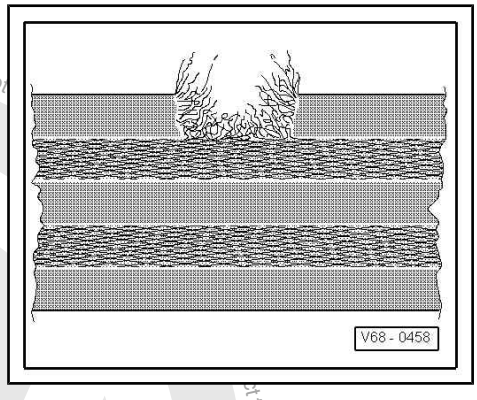

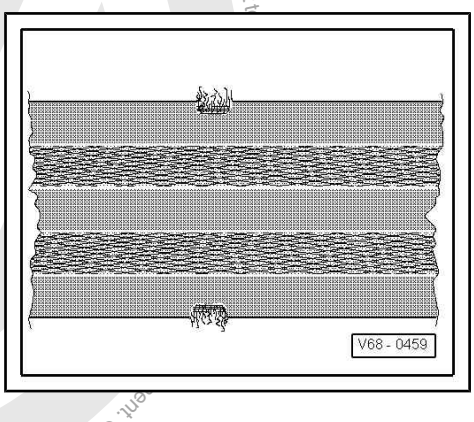

Protected by copyright. Copying for private or commercial purposes, in part or in whole, is not permitted unless authorised by Volkswagen AG. Volkswagen AG does not
Copyright by Volkswagen AG.
satelettronica

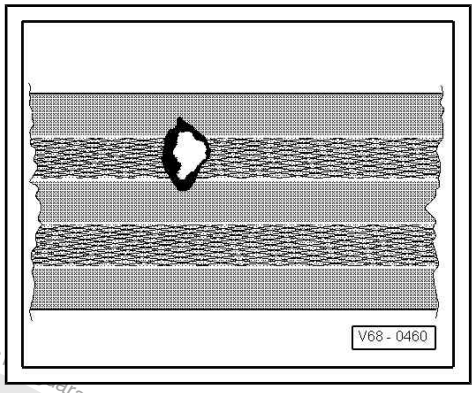

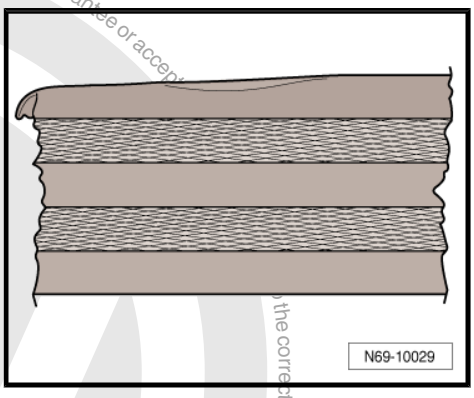

- If either of the following illustrated damage examples (1 and/ or 2) are found on accident vehicle - renew seat belt complete with belt buckle and belt height adjustment.
- If damage as illustrated under points 1, 2, 3 and/or 4 is determined on a vehicle which has not been involved in an accident, it is sufficient to renew damaged belt only.
- Belt webbing cut, torn or chafed.
- Torn webbing loops on edge belt.
- Burn marks from cigarettes or similar.
- One edge of belt deformed or wavy.

2.1.2 Checking inertia reel (locking mechanism)

The inertia reel has two locking functions.

♦ The first locking function is triggered by the belt being jerked out of reel (belt extraction acceleration).

Checking

– Pull belt out of inertia reel with firm jerk.

- Will not lock - renew seat belt complete with buckle.
- If difficulties are experienced when belt is extended or retracted, first check whether position of inertia reel has been altered.
- The second locking function is triggered by a change in vehicle speed (vehicle-dependent locking function). Vehicle must be moved over a flat level surface for this.

Checking

– Put on seat belt.

– Accelerate vehicle to 20 km/h and then carry out emergency braking with foot brake.

- If seat belt is not locked by locking mechanism during braking procedure, renew seat belt complete with buckle.

> ⚠ WARNING
>
> *For safety reasons, the road test should be carried out on a traffic-free stretch to ensure that other road users are not endangered.*

Copyright by Volkswagen AG. Volkswagen AG does not guarantee or accept any liability with respect to the correctness of information in this document. Copyright by Volkswagen AG. Reproduction, copying or publication for private or commercial purposes, in part or in whole, is not permitted without the express consent of Volkswagen AG.
satelettronica

2.1.3 Visually checking belt buckle

– Inspect belt buckle for cracks and chips.

• If damage is determined, renew seat belt complete with belt buckle.

2.1.4 Checking operation of belt buckle

Checking belt buckle:

– Push latch plate into belt buckle until it engages audibly. Check whether locking mechanism is properly engaged by pulling firmly on belt webbing.

• If latch plate fails even once to engage properly in belt buckle during at least 5 tests, renew seat belt complete with belt buckle.

Checking release mechanism:

– Release seat belt by pressing button on belt buckle with finger pressure.

– When belt is slack, latch plate must spring out of belt buckle on its own.

• Carry out test at least 5 times. If latch plate fails even once to spring out of buckle, renew seat belt complete with belt buckle.

WARNING

Under no circumstances whatsoever may lubricant be used to eliminate noise or stiffness in belt buckle buttons.

2.1.5 Checking belt anchors, belt guides and latch plates

Plastic-coated hardware show fine, parallel scoring after stress on belt system (when belt was fastened during accident). (On the other hand, wear caused by frequent belt use can be recognized by smooth wear, free of lines).

– Inspect for deformation, fracturing and cracks in plastic.

• If scoring and/or damage is determined, renew seat belt complete with belt latch.

2.1.6 Checking securing parts and anchorage points

♦ Latch tongue deformed (stretched)

♦ Height adjuster non-functional

♦ Anchorage points (seat, pillars, vehicle floor) distorted or thread damaged

• If damage is determined on these parts, renew seat belt complete with belt buckle.

• Renew anchorage points.

Note

In case of damage resulting not from an accident, but for example, from wear, only the part which is actually damaged need be renewed.

Protected by copyright. Copying for private or commercial purposes, in part or in whole, is not permitted unless authorised by Volkswagen AG. Volkswagen AG does not guarantee or accept any liability with respect to the correctness of information in this document. Copyright by Volkswagen AG.
satelettronica

3 Airbag

3.1 Tools

Special tools and workshop equipment required

- Airbag adapter -VAS 5094-

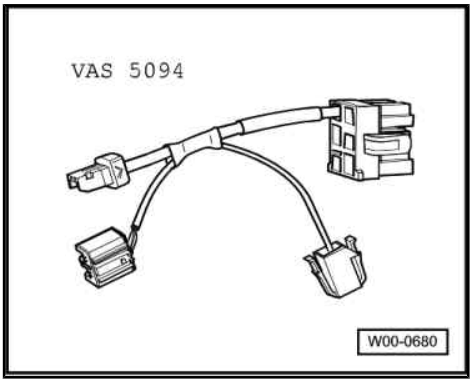

3.2 Overview - installation locations

3.2.1 For vehicles ▸ 07.97

Protected by copyright. Copying for private or commercial purposes, in part or in whole, is not permitted unless authorised by Volkswagen AG. Volkswagen AG does not guarantee or accept any liability with respect to the correctness of information in this document. Copyright by Volkswagen AG.

satelettronica

1 - Airbag unit, driver side

- ❑ Removing ⇒ page 40

2 - Airbag unit, front passenger side

- ❑ Removing ⇒ page 51
- ❑ Deactivating and activating (adapting) ⇒ Body self-diagnosis; Rep. Gr. 01 ; Self-diagnosis for airbag systems .

3 - Diagnosis connector

4 - Airbag control unit -J234-

- ❑ Removing ⇒ page 58

5 - Airbag warning lamp -K75-

6 - Connector (terminal 15/1a)

7 - Ground rail

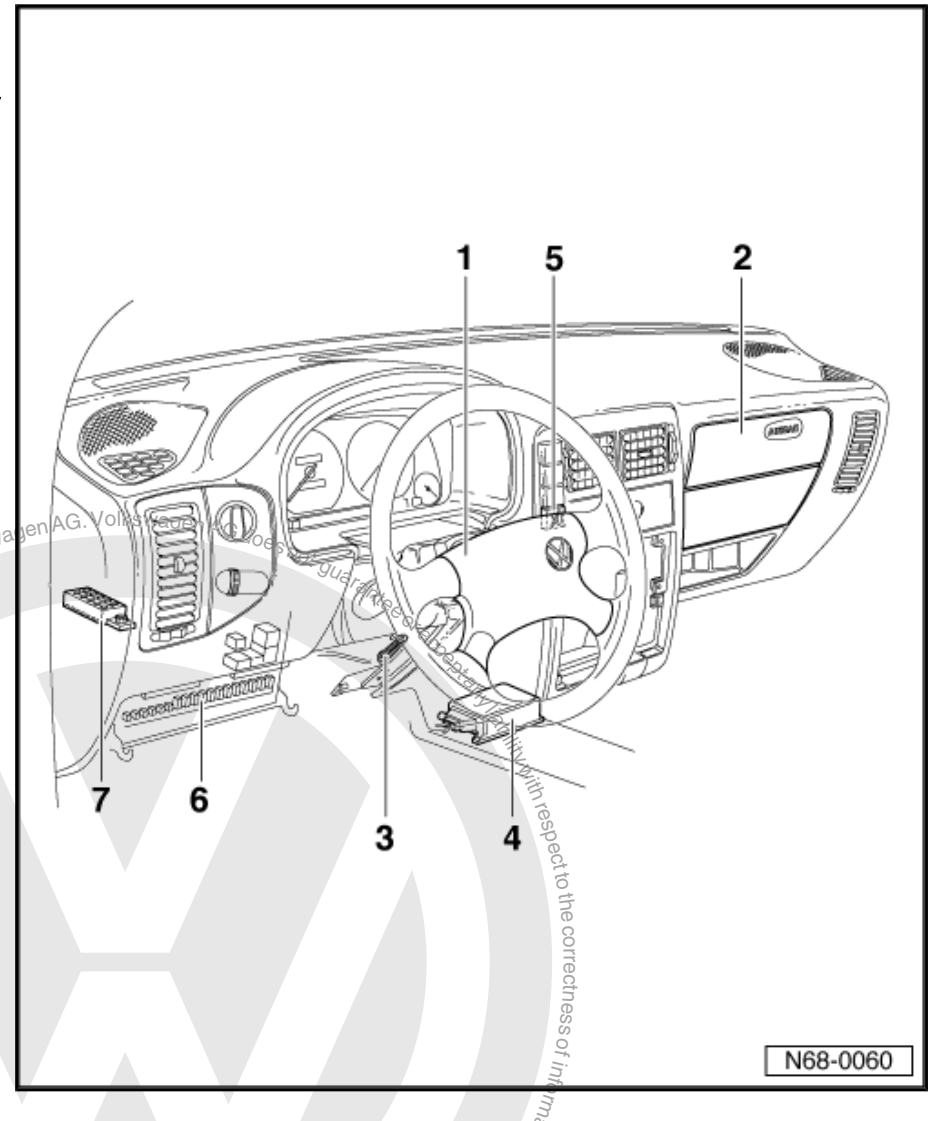

Protected by copyright. Copying for private or commercial purposes, in part or in whole, is not permitted unless authorised by Volkswagen AG. Volkswagen AG does not guarantee or accept any liability with respect to the correctness of information in this document. Copyright by Volkswagen AG.
satelettronica

3.2.2 For vehicles 08.97 ▸ 09.99

1 - Airbag warning lamp -K75-

2 - Airbag unit, driver side

- ❑ Removing ⇒ page 40

3 - Airbag unit, front passenger side

- ❑ Removing ⇒ page 51
- ❑ Deactivating and activating (adapting) ⇒ Body self-diagnosis; Rep. Gr. 01 ; Self-diagnosis for airbag systems .

4 - Airbag control unit -J234-

- ❑ Removing ⇒ page 58

5 - Diagnosis connector

6 - Ground rail

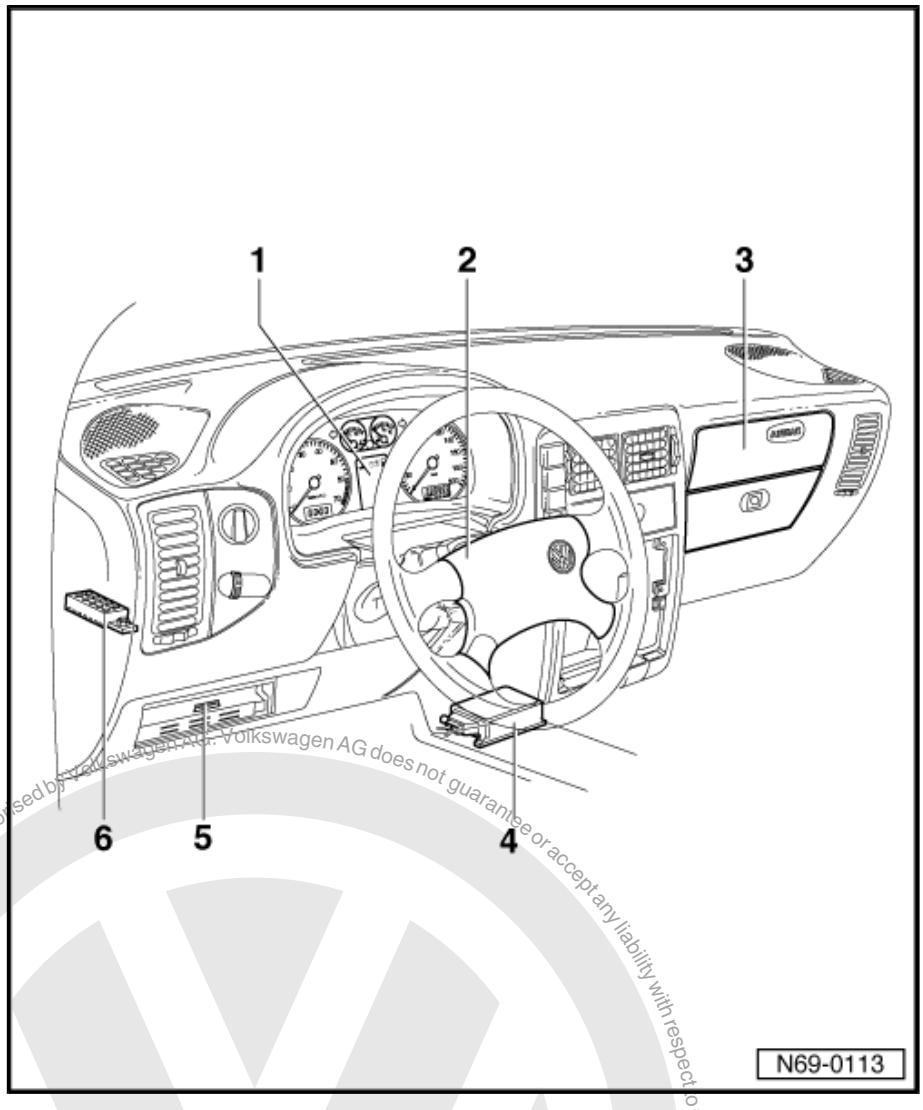

Protected by copyright. Copying for private or commercial purposes, in part or in whole, is not permitted unless authorised by Volkswagen AG. Volkswagen AG does not guarantee or accept any liability with respect to the correctness of information in this document. Copyright by Volkswagen AG.
satelettronica

3.2.3 For vehicles 10.99 ▸

1 - Airbag unit, driver side

- ❑ Removing ⇒ page 43

2 - Airbag warning lamp -K75-

3 - Airbag unit, front passenger side

- ❑ Removing ⇒ page 51
- ❑ Deactivating and activating (adapting) ⇒ Body self-diagnosis; Rep. Gr. 01 ; Self-diagnosis for airbag systems .

4 - Diagnosis connector

- ❑ Below ashtray housing.

5 - Side airbag, front passenger side

- ❑ Removing ⇒ page 59

6 - Sensor (side airbag, front passenger's side)

- ❑ Removing ⇒ page 62

7 - Side airbag, driver side

- ❑ Removing ⇒ page 59

8 - Sensor (side airbag, driver's side)

- ❑ Removing ⇒ page 62

9 - Airbag control unit -J234-

- ❑ Removing ⇒ page 58

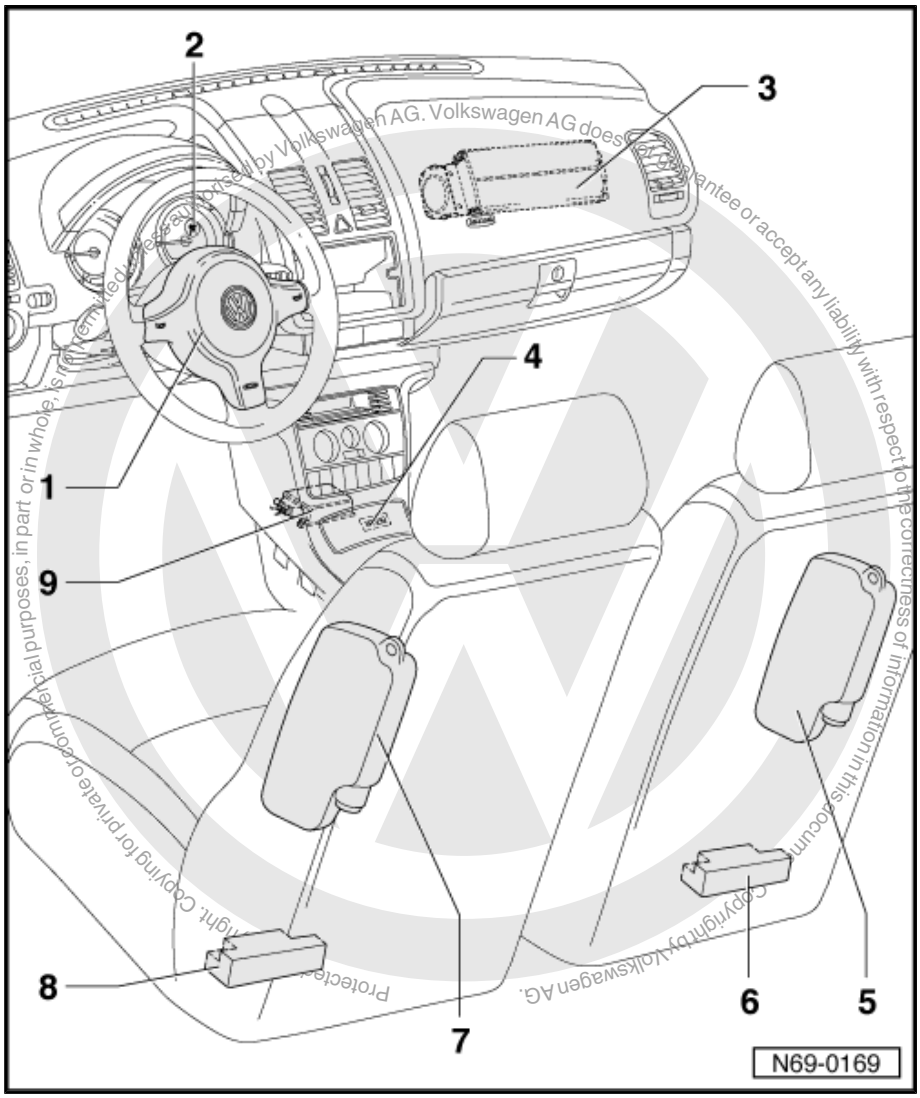

3.3 Safety precautions when working on the airbag

- ♦ Testing, removing, installing and repair work may only be performed by qualified personnel.
- ♦ Before working on the airbag system, disconnect the battery earth strap. No waiting time is necessary after disconnecting the battery. When the airbag system is connected to a voltage source, no person must be present inside the vehicle.
- ♦ Before picking up (touching) the airbag unit, the mechanic must electrostatically discharge him/herself. This can be done by touching a suitable metal part, for example, a water pipe, a heater pipe or a metal frame.
- ♦ Airbag units must be installed immediately after they are removed from their packaging.
- ♦ If work is interrupted, the airbag unit must be replaced in its packaging.
- ♦ Leaving airbag unit unattended is prohibited.

satelettronica

- Removed airbag units must be stored with the padded side facing up.
- Airbag units which have been dropped onto a hard surface or show signs of damage must not be installed in the vehicle.
- Storage and transportation are subject to laws governing explosive substances.

3.4 Disposal of airbag units

- Non-triggered airbag units must, according to national legislation, be disposed of correctly in the original packaging. If in doubt, contact your distribution centre or importer for details.
- Used airbag units can be disposed of via commercial waste disposal.

3.5 Deactivating the airbag

WARNING

The prerequisites for deactivating one or more airbag units have been published in the "Technical Service Handbook".

In the "Technical Service Handbook 2", the "Procedure ID" or the "TPL number" for the deactivation of airbag units: "2000987".

ElsaWin

→ Technical problem solution

→ Technical service handbook

→ Technical problem solutions

→ Vehicle electrics

→ Function

→ Passenger protection

→ Deactivation of airbag units

→ Systems

3.6 Renewing airbag units following an accident

3.6.1 Accident involving triggering of airbag

Following the renewal of airbag units or the airbag control unit, the labels (only tear-off strips) of the new components must be stuck onto the "Registry note 2 for Airbag Systems". For registration, the "Registry note 2 for Airbag Systems" must be sent on to the responsible distribution centre or importer.

The "Registry note 2 for Airbag Systems" can be printed out of the "Technical Service Handbook":

ElsaWin

→ Technical problem solution

→ Technical service handbook

→ Technical problem solutions

→ Vehicle electrics

→ Function

Protected by copyright. Copyright by Volkswagen AG. Volkswagen AG does not guarantee or accept any liability with respect to the correctness of information in this document. Copyright by Volkswagen AG. Unauthorised reproduction, in part or whole, is not permitted unless authorised by Volkswagen AG.
satelettronica

→ Passenger protection

→ Deactivation of airbag units

→ Systems

In the “Technical Service Handbook 2”, the “Procedure ID” or the “TPL number” for this procedure: “2000987”.

As a matter of rule, the following components will have to be renewed following an accident where the airbag has been triggered:

- All triggered airbag units with control units and sensors.
- Supports for front passenger module if front passenger airbag was triggered.
- Coil connector with slip ring, when driver airbag has triggered.
- All seat belts with triggered belt tensioners.
- In addition, the following must also be replaced if necessary (visual check): All damaged components.

3.6.2 Accident not involving triggering of airbag

- If the airbag warning lamp (K 75) does not indicate a fault, it is not necessary to replace the airbag components. The seat belts should be checked separately.

3.7 Removing and installing driver side airbag unit ▸ 09.99

Note

- *Obtain radio unit code before disconnecting battery.*
- *After reconnecting the battery, ensure vehicle equipment (radio, clock, electric windows) are checked as per Workshop manual/Owner's manual.*

3.7.1 Assembly overview

Protected by copyright. Copying for private or commercial purposes, in part or in whole, is not permitted unless authorised by Volkswagen AG. Volkswagen AG does not guarantee or accept any liability with respect to the correctness of information in this document. Copyright by Volkswagen AG.
satelettronica

1 - Steering wheel
- ❑ Removing ⇒ page 45

2 - Connector

3 - Airbag unit

4 - Hexagon shoulder nut
- ❑ 50 Nm

5 - Hexagon socket-head bolt
- ❑ Qty. 2
- ❑ 6.5 Nm
- ❑ Must always be replaced.
- ❑ Seated diagonally to steering axis.

6 - Bottom part of trim

7 - Foam tube

8 - Connector

9 - Return spring with slip ring
- ❑ Removing ⇒ page 49

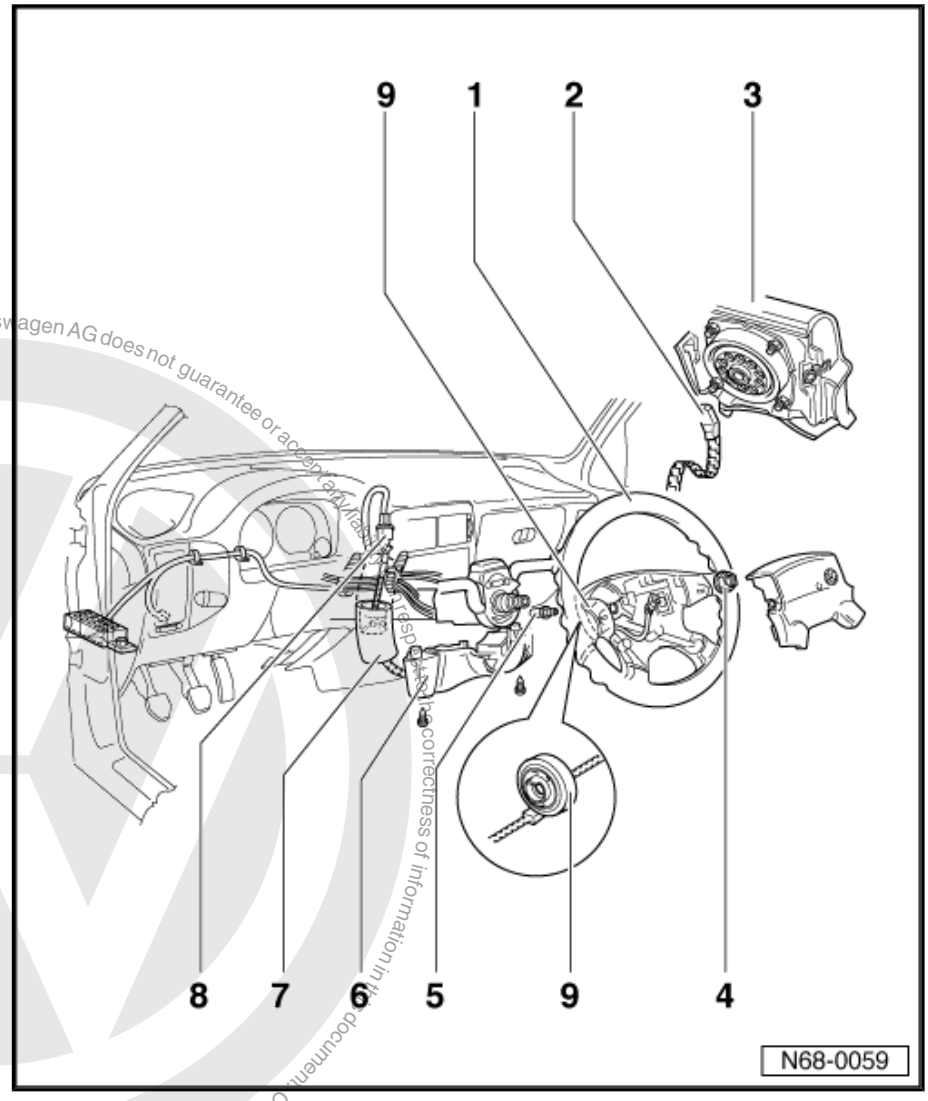

Protected by copyright. Copying for private or commercial purposes, in part or in whole, is not permitted unless authorised by Volkswagen AG. Volkswagen AG does not guarantee or accept any liability with respect to the correctness of information in this document. Copyright by Volkswagen AG.

satelettronica

3.7.2 Removing

> ⚠ WARNING
>
> *Disconnect battery earth strap before working on electrical system.*

– Position steering wheel -1- in central position (wheels straight ahead).

– Remove hexagon socket-head bolts -5- (6.5 Nm). Remove airbag unit -3- from steering wheel.

> ⚠ WARNING
>
> *Electrostatic discharges may result in unintentional triggering of airbag. Therefore, the mechanic must electrostatically discharge him/herself before disconnecting the igniter and earth wires. This can be done by briefly touching the body or striker plate of the door.*

– Pull red connector -2- off airbag unit.

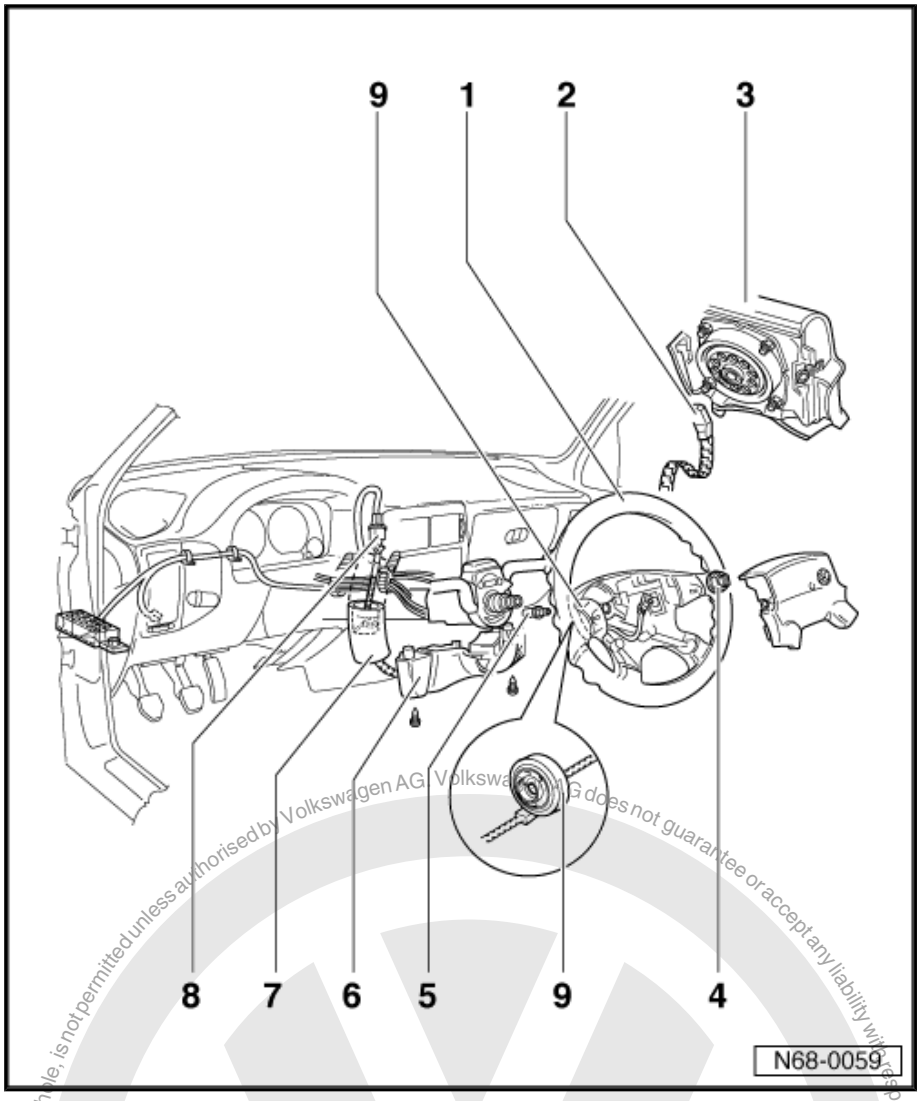

3.7.3 Installing

Installation is carried out in the reverse order.

– Switch on ignition.

> ⚠ WARNING
>
> *Ensure that nobody is in the vehicle.*

– Connect battery earth strap.

Protected by copyright. Copying for private or commercial purposes, in part or in whole, is not permitted unless authorised by Volkswagen AG. Volkswagen AG does not guarantee or accept any liability with respect to the correctness of information in this document. Copyright by Volkswagen AG.
satelettronica

3.8 Removing and installing driver side air-bag unit 10.99 ▸

Note

- *Before disconnecting the battery see the note concerning the coding in the instruction manual for the radio.*
- *After reconnecting the battery, ensure vehicle equipment (radio, clock, electric windows) are checked as per Workshop manual/Owner's manual.*

3.8.1 Assembly overview

1 - Steering wheel
- ❑ Removing ⇒ page 47

2 - Connector
- ❑ For airbag unit

3 - Airbag unit
- ❑ Removing ⇒ page 43

4 - Hexagon shoulder nut
- ❑ 50 Nm

5 - Connector
- ❑ For horn

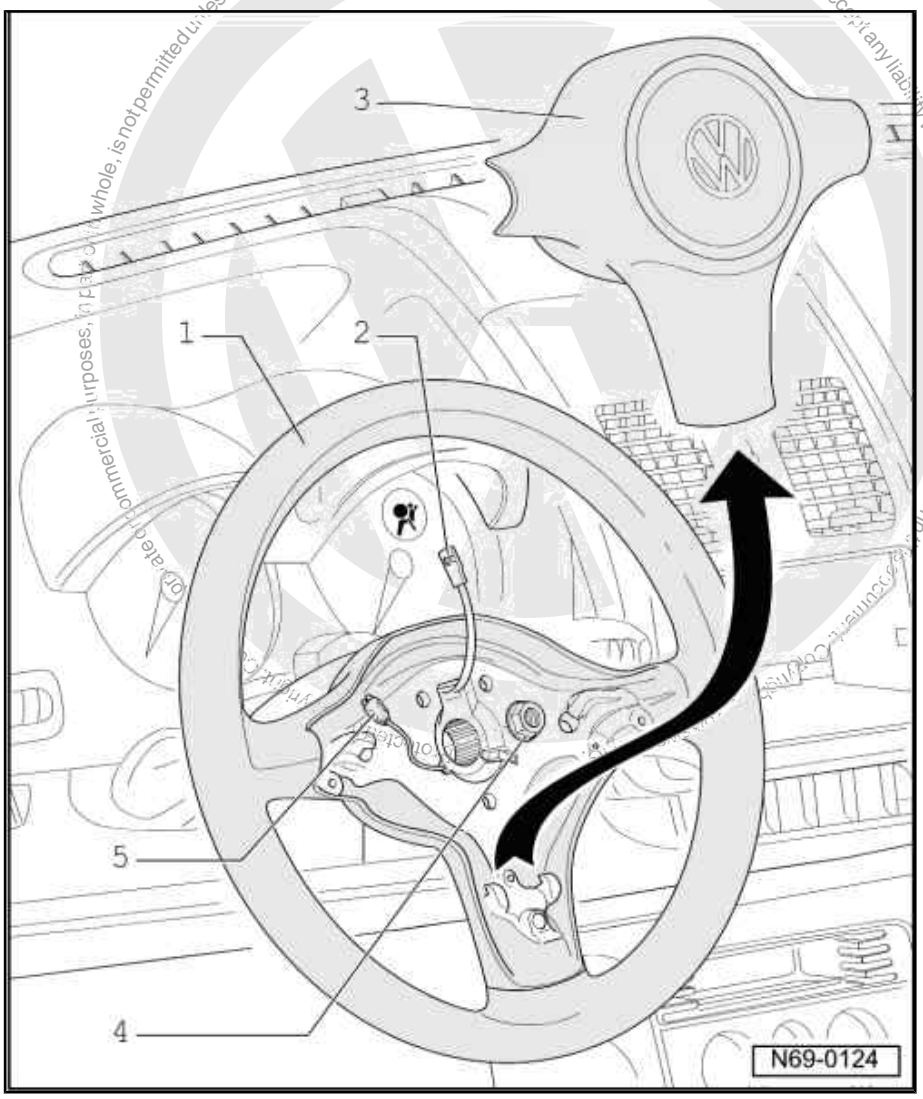

3.8.2 Removing

WARNING

Disconnect battery earth strap before working on electrical system.

satelettronica

Protected by copyright. Copying for private or commercial purposes, in part or in whole, is not permitted unless authorised by Volkswagen AG. Volkswagen AG does not guarantee or accept any liability with respect to the correctness of information in this document.

- Turn steering wheel -1- until horizontal spokes are vertical. Pull out steering column completely and press down to lowest position.
- Insert a screwdriver, about 5 mm wide and angled to a length of 55 mm, in hole on back of steering wheel hub.
- Turn screwdriver 90°, circlip -2- is pressed off lug in steering wheel hub and airbag unit is released on this side.
- Turn steering wheel back 180° and release second retaining hook on opposite side.
- Grip airbag unit by horizontal spokes and lever out of vertical anchorage.

> ⚠ **WARNING**
>
> ***Electrostatic discharges may result in unintentional triggering of airbag. Therefore, the mechanic must electrostatically discharge him/herself before disconnecting the igniter and earth wires. This can be done by briefly touching the body or striker plate of the door.***

- Pull connectors off airbag unit.

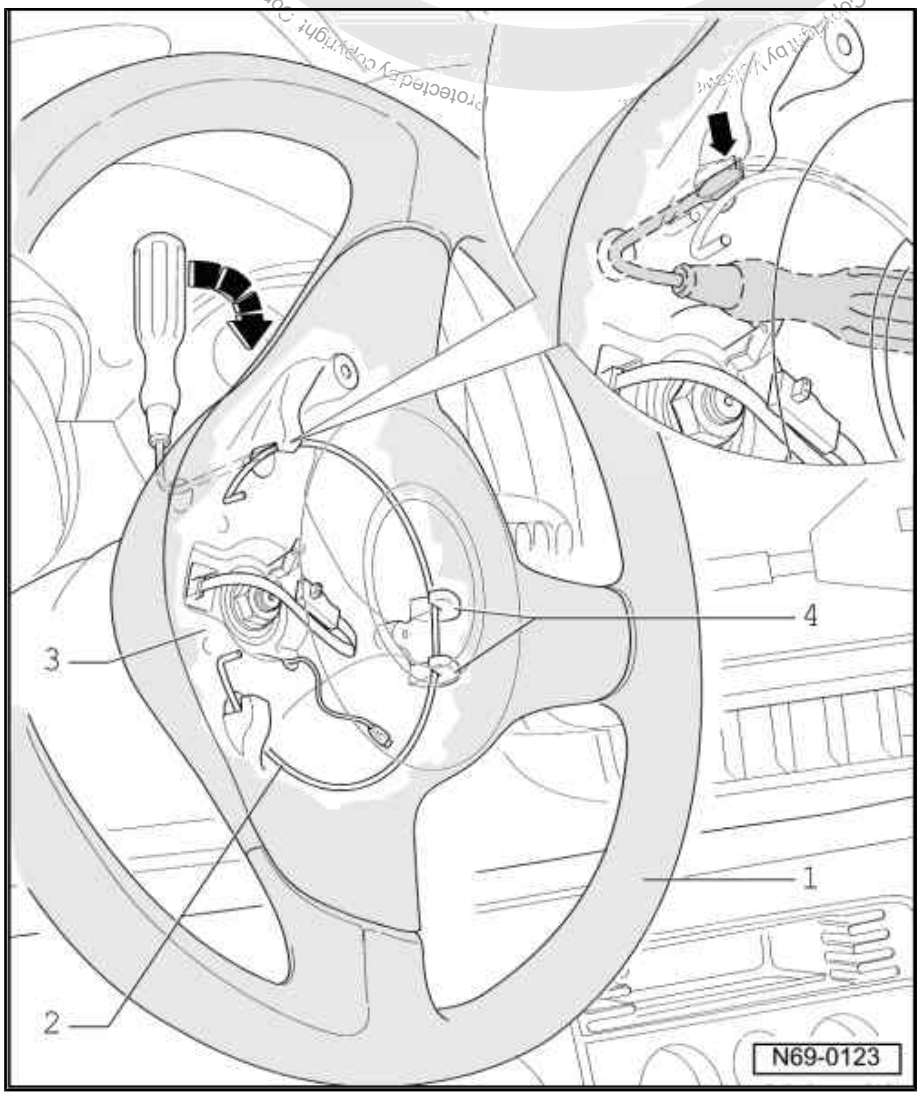

satelettronica

3.8.3 Installing

– Connect connectors to airbag unit.

– Set airbag unit to installation position. Press on airbag unit, first in horizontal, then in vertical spoke area, until it engages.

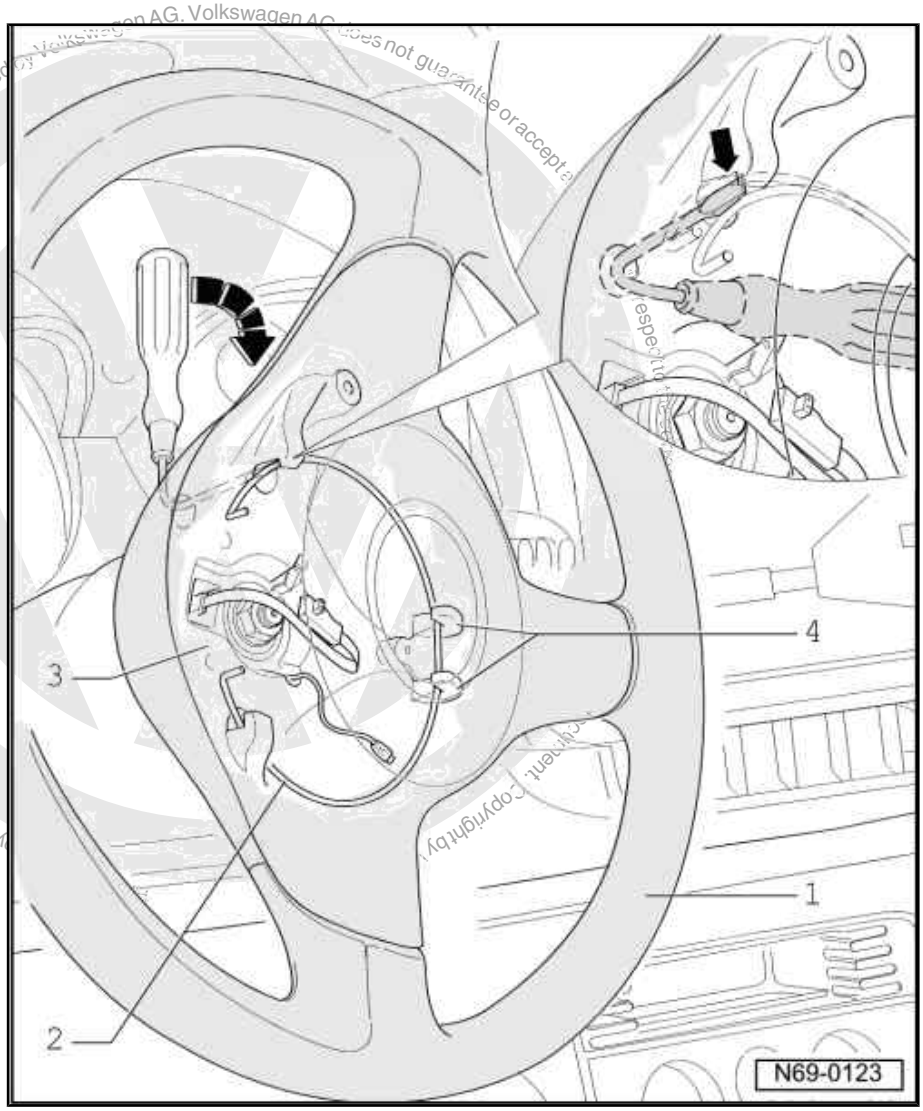

– Switch on ignition.

> ⚠ **WARNING**
>
> ***When connecting the battery earth strap ensure no person is in the vehicle.***

– Connect battery earth strap.

3.9 Removing and installing steering wheel ▸ 09.99

3.9.1 Removing

– Remove driver airbag unit ⇒ page 40 .

satelettronica

– Unscrew bottom part of trim -6- for steering column switch.
– Pull foam tube -7- off the connector -8- and separate connector.
– Unscrew hexagon nut -4- and pull steering wheel off the steering column (hexagon nut 50 Nm).

Note

Coil connector with slip ring -9- remains on the steering wheel.

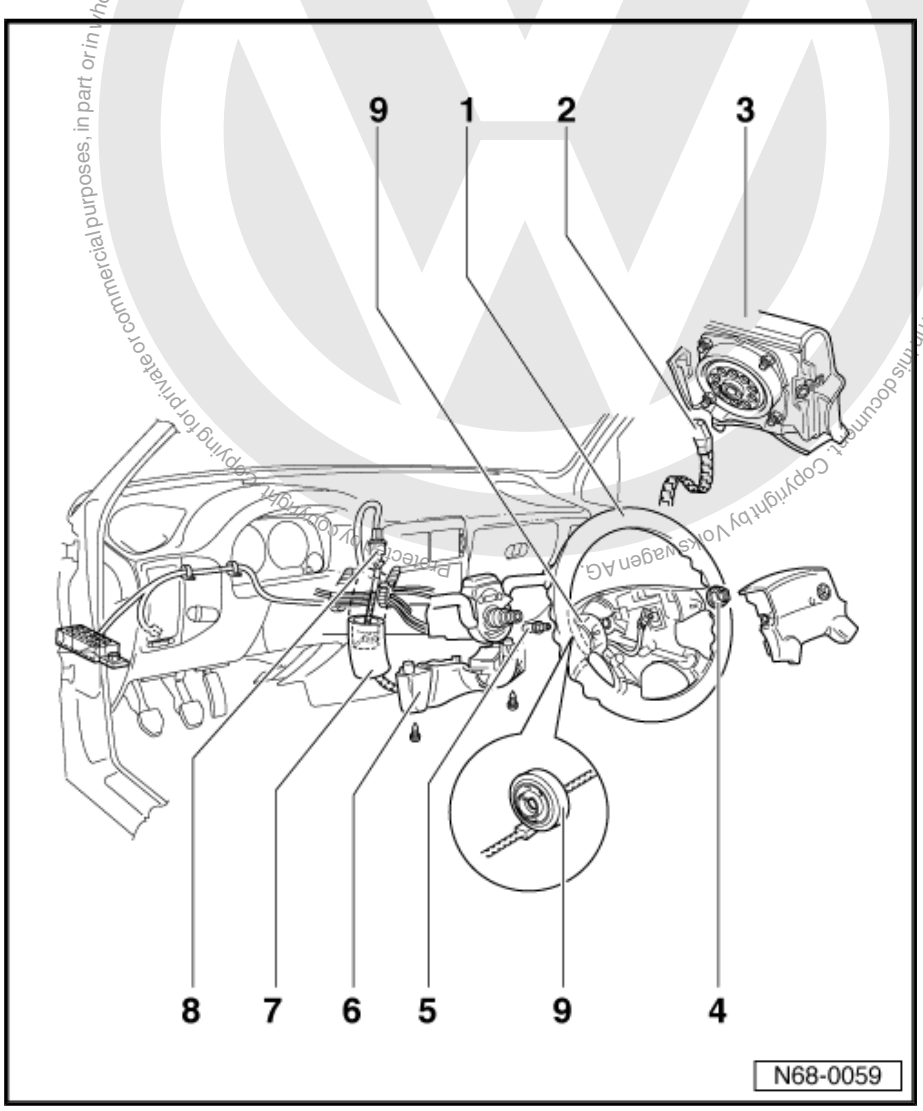

3.9.2 Installing

Installation is carried out in reverse order of removal.

satelettronica

Protected by copyright. Copying for private or commercial purposes, in part or in whole, is not permitted unless authorised by Volkswagen AG. Volkswagen AG does not guarantee or accept any liability with respect to the correctness of information in this document. Copyright by Volkswagen AG.

3.10 Removing and installing steering wheel 10.99 ▸

3.10.1 Assembly overview

1 - Steering wheel
- ❑ Removing ⇒ page 47
- ❑ Installing ⇒ page 48

2 - Connector

3 - Airbag unit

4 - Hexagon shoulder nut
- ❑ 50 Nm

5 - Return spring with slip ring
- ❑ Removing ⇒ page 49

6 - Bottom part of trim

7 - Foam tube

8 - Connector

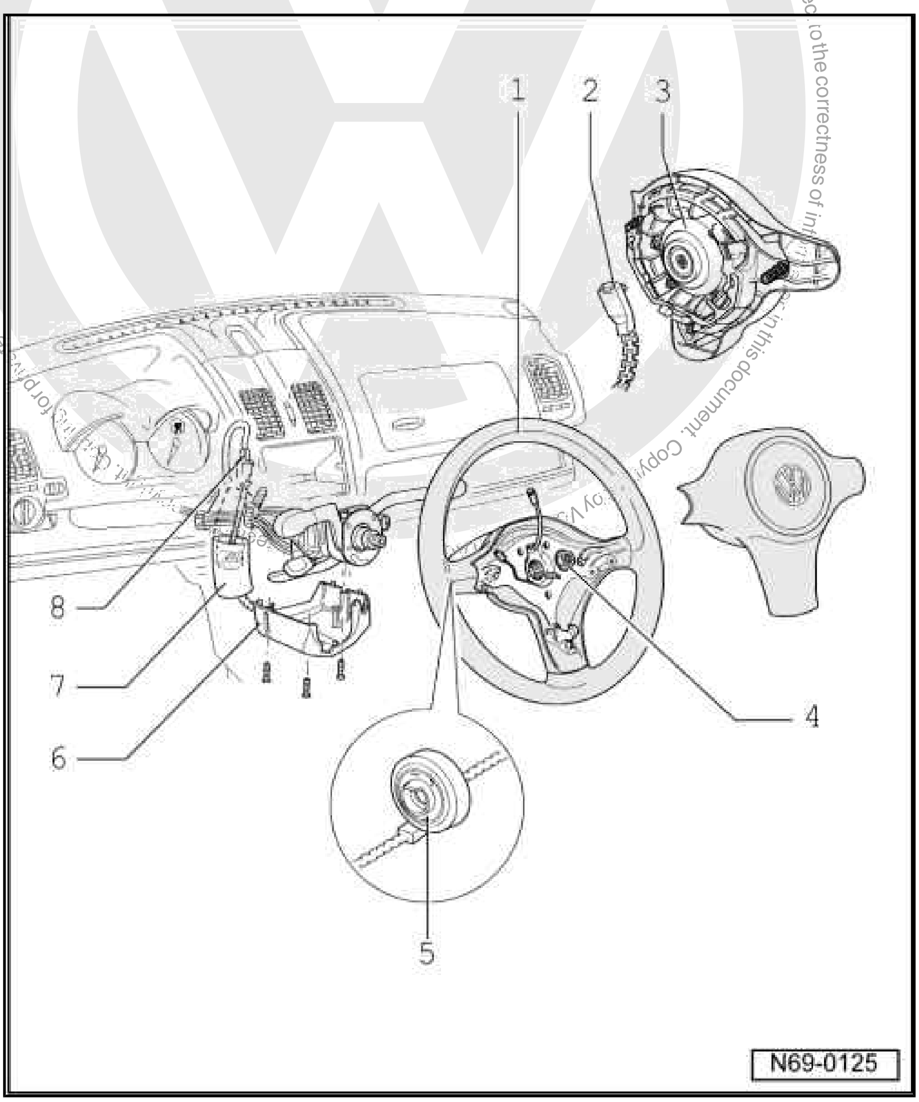

3.10.2 Removing

– Remove driver airbag unit ⇒ page 43 .

– Unscrew bottom part of trim -6- for steering column switch.

– Pull foam tube -7- off the connector -8- and separate connector.

– Turn wheels to straight-ahead position.

– Unscrew hexagon nut -4- and pull steering wheel off the steering column (hexagon nut 50 Nm).

Note

Coil connector with slip ring -5- remains on the steering wheel.

satelettronica

Protected by copyright. Copying for private or commercial purposes, in part or in whole, is not permitted unless authorised by Volkswagen AG. Volkswagen AG does not guarantee or accept any liability with respect to the correctness of information in this document. Copyright by Volkswagen AG.

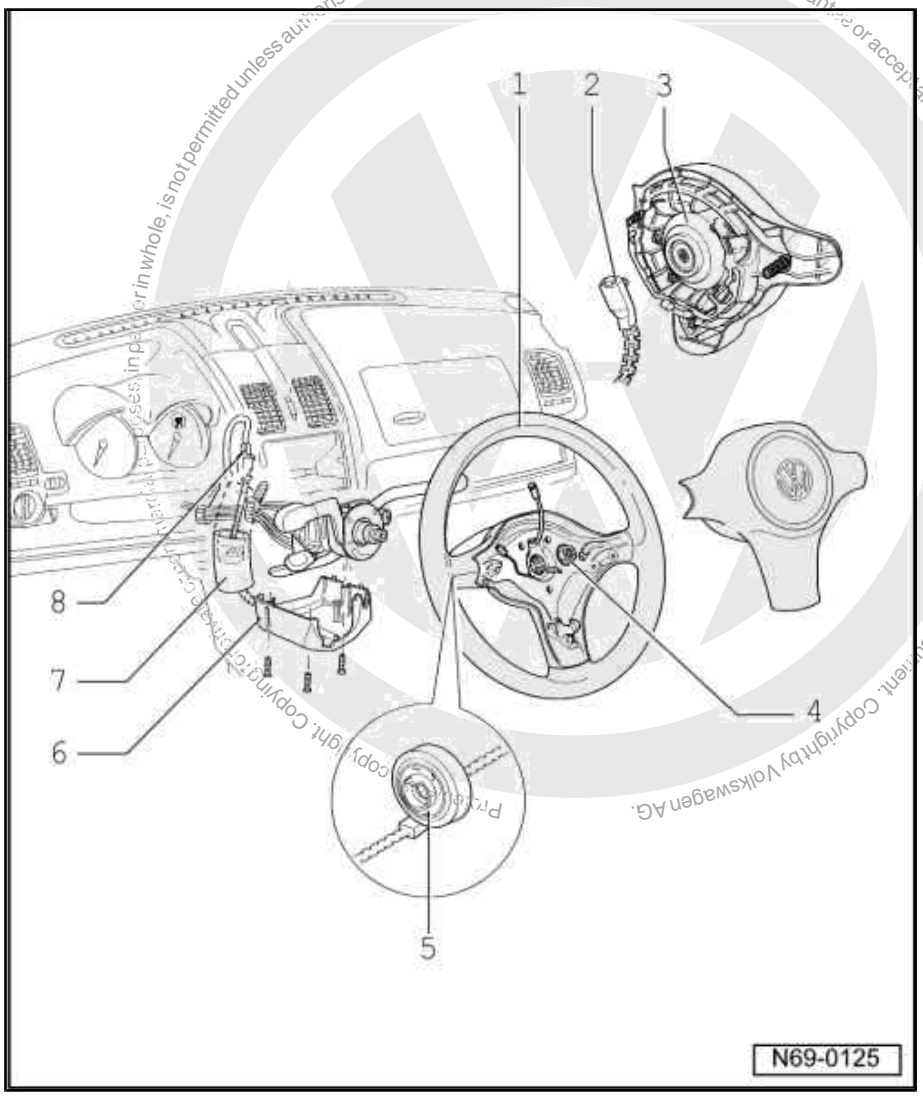

3.10.3 Installing

– Set steering wheel on so that lines on steering wheel hub -2- and punch marks on steering column -3- align.

Steering columns supplied as spare parts have no punch marks.

Following wheel alignment or a test drive, these must be identified.

Tightening torques:

Hexagon collar nut to steering column -1-	50 Nm

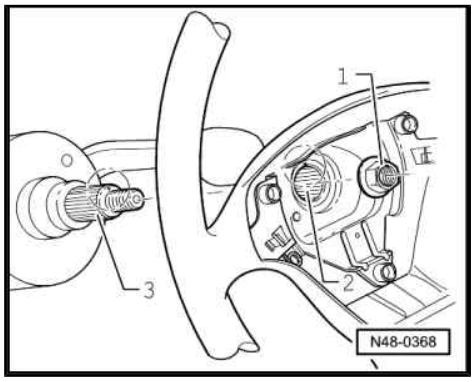

satelettronica

3.11 Removing and installing coil connector with slip ring ▸ 09.99

Note

- *The steering must be in the centre position (wheels in straight-ahead position) when the coil connector and slip ring are removed and installed.*
- *As a new part the coil connector with slip ring is secured in the centre position by a cable tie.*

3.11.1 Removing

Driver side airbag unit and steering wheel removed.

– Separate single connector for horn.

– Unscrew Phillips screws -1- and pull coil connector with slip ring -2- off the steering wheel.

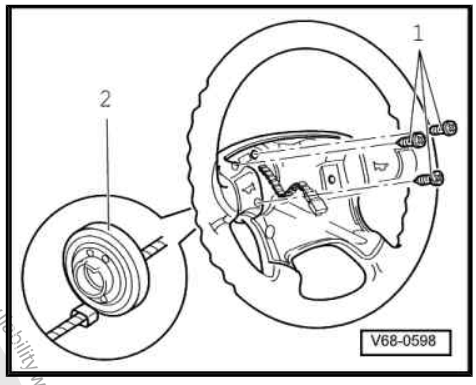

3.11.2 Installing

Installation is carried out in reverse order of removal.

3.12 Removing and installing coil connector with slip ring 10.99 ▸

Note

- *When removing and installing return spring with slip ring, ensure that return spring is in centre position.*
- *As a new part the coil connector with slip ring is secured in the centre position by a cable tie.*

3.12.1 Removing

- Driver side airbag unit, steering wheel and lower steering column switch trim removed.

– Disconnect single connector for horn and connector for coil connector with slip ring.

satelettronica

– Unscrew Phillips screws -1- and pull coil connector with slip ring -2- off the steering wheel.

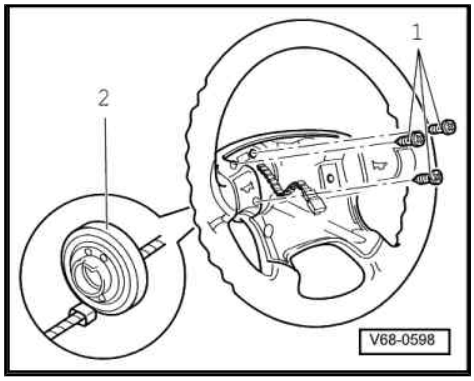

The following work sequence is valid only for vehicles with Electronic Stabilisation Programme -ESP-

Vehicles with ESP are additionally equipped with the steering angle sender -G85- . The sender is installed in together with the coil connector and slip ring in a housing.

– Front wheels and steering wheel must be in straight-ahead position.

– Position front wheels to straight-ahead position, if necessary, and remove steering wheel.

– Position steering angle sender to centre position.

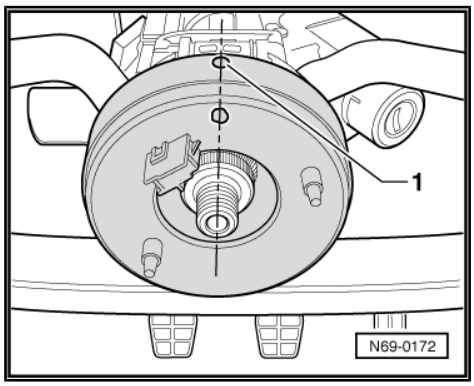

Note

- *Yellow spot must be visible in hole -1-.*
- *The markings must align.*

– Separate connector to steering angle sender -G85- .

– Carefully lift up hooks -arrows- and pull off steering angle sender.

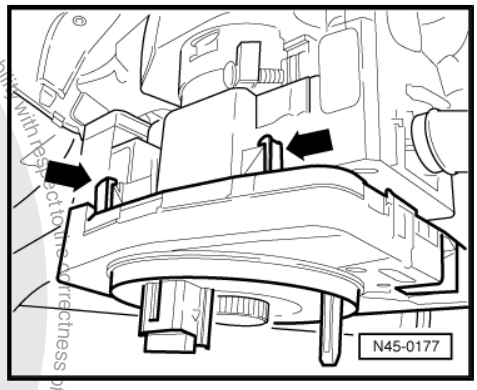

3.12.2 Installing

– Installation is carried out in the reverse order.

For vehicles with -ESP- additionally observe the following

When installing steering angle sensor, ensure component is correctly seated and is free of stress.

– Front wheels and steering wheel must be in straight-ahead position.

– Remove transportation protection on markings before installing a new steering angle sender -G85-.

– Fit steering angle sender -G85- until lugs engage.

satelettronica

– Position steering angle sender -G85- to centre position.

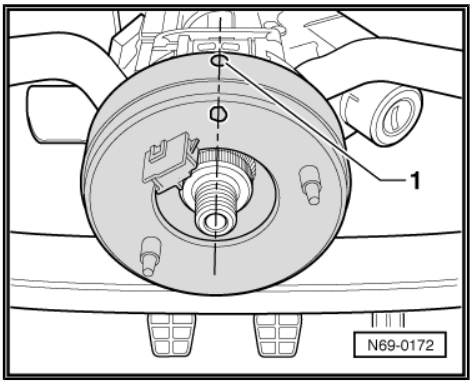

Note

- *Yellow spot must be visible in hole -1-.*
- *The markings must align.*

– A zero calibration procedure must then be carried out ⇒ Running gear self-diagnosis for ABS; Rep. Gr. 01 ; Carry out self-diagnosis, introduce basic setting

3.13 Removing and installing passenger side airbag unit ▸ 09.99 (without glove box)

Note

- *Obtain radio unit code before disconnecting battery.*
- *After reconnecting the battery, ensure vehicle equipment (radio, clock, electric windows) are checked as per Workshop manual/Owner's manual.*

3.13.1 Assembly overview

Protected by copyright. Copying for private or commercial purposes, in part or in whole, is not permitted unless authorised by Volkswagen AG. Volkswagen AG does not guarantee or accept any liability with respect to the correctness of information in this document. Copyright by Volkswagen AG.

satelettronica

1 - Airbag unit, front passenger side

2 - Retaining frame

- ❑ Must be replaced if air-bag has triggered

3 - Cross-head screws

4 - Passenger side storage compartment

5 - Connector

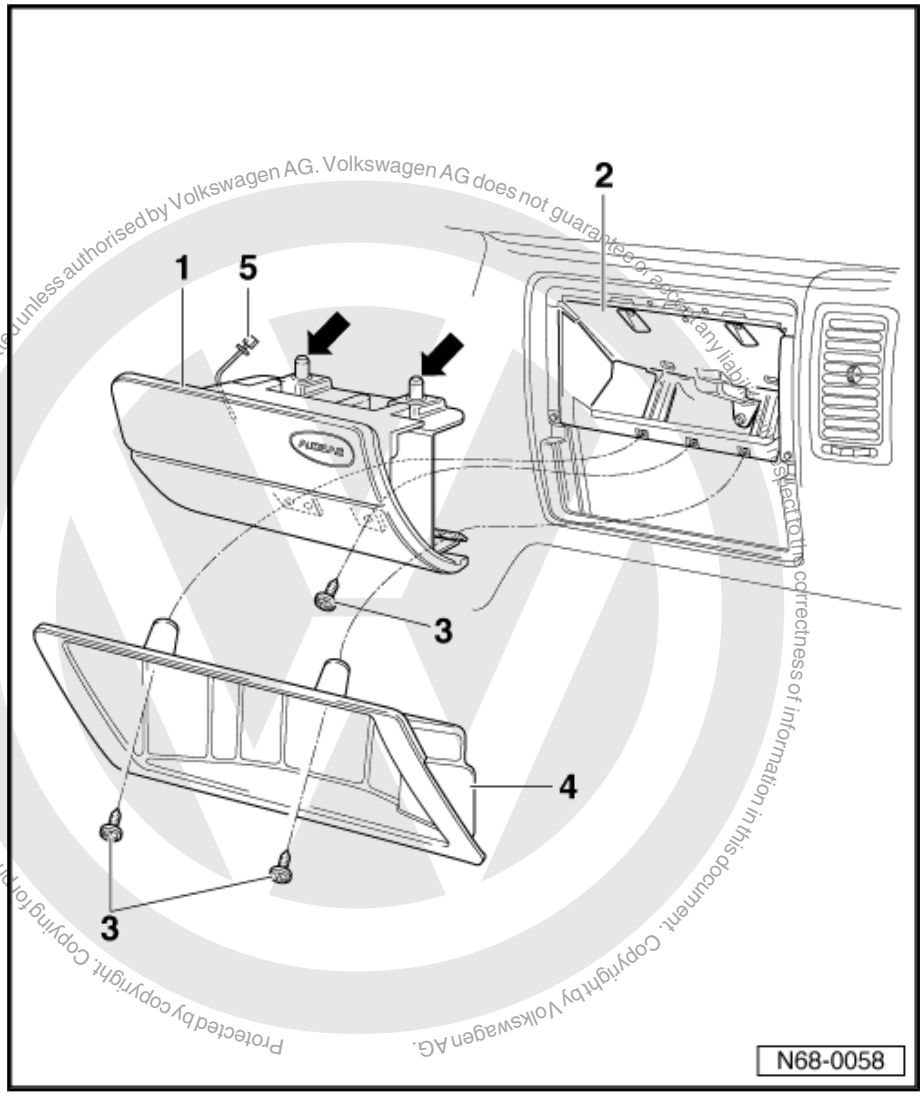

Protected by copyright. Copying for private or commercial purposes, in part or in whole, is not permitted unless authorised by Volkswagen AG. Volkswagen AG does not guarantee or accept any liability with respect to the correctness of information in this document. Copyright by Volkswagen AG.

3.13.2 Removing

WARNING

Disconnect battery earth strap before working on electrical system.

– Unscrew cross-head screws -3- from passenger side storage compartment -4-.

– Remove cross-head screw -3-. Pull the airbag unit -1- out of the lower section of the dash panel and remove it from the supporting frame -2- (pay attention to the upper studs -arrows-).

WARNING

Electrostatic discharges may result in unintentional triggering of airbag. Therefore, the mechanic must electrostatically discharge him/herself before disconnecting the igniter and earth wires. This can be done by briefly touching the body or striker plate of the door.

satelettronica

– Separate airbag unit connector -5-.

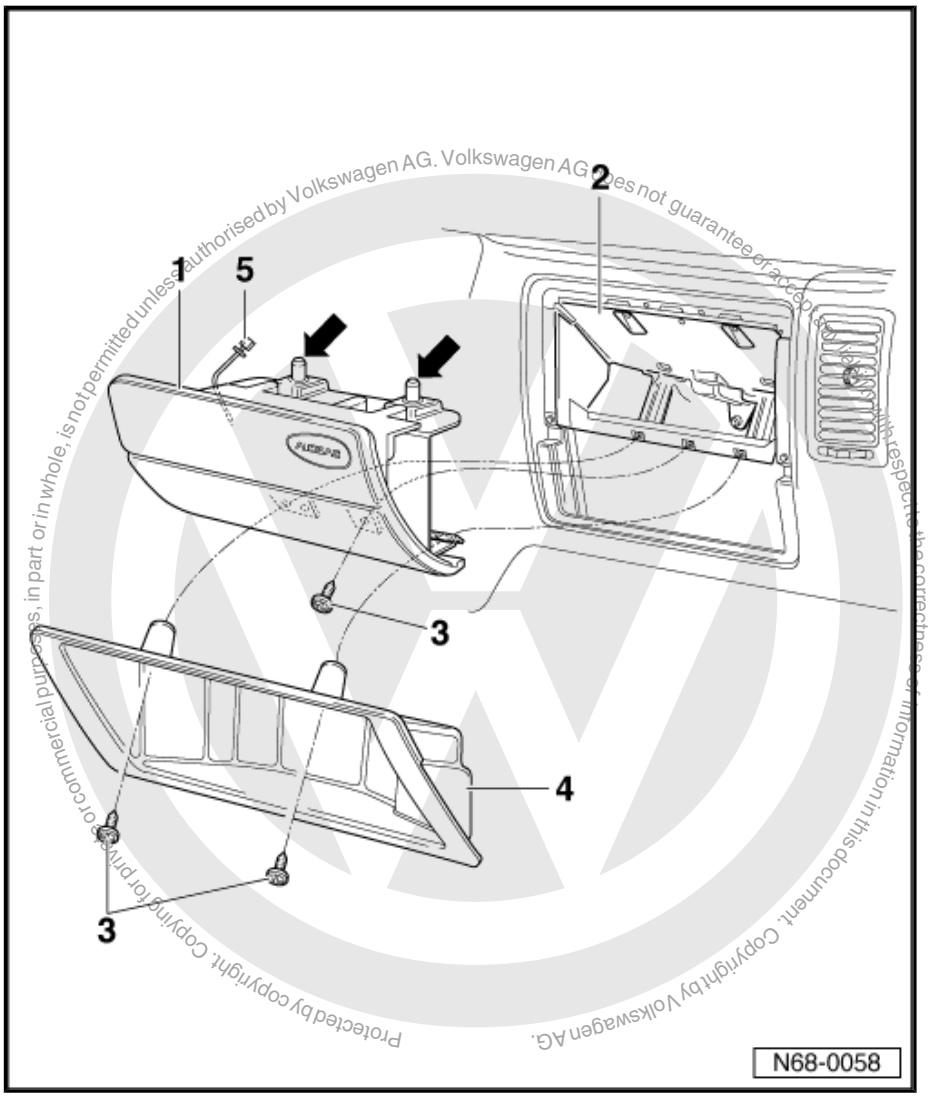

3.13.3 Installing

Installation is carried out in the reverse order.

– Switch on ignition.

> ⚠ WARNING
>
> *Ensure that nobody is in the vehicle.*

– Connect battery earth strap.

satelettronica

3.14 Removing and installing passenger side airbag unit ▸ 09.99 (with glove box)

Note

- *Obtain radio unit code before disconnecting battery.*
- *After reconnecting the battery, ensure vehicle equipment (radio, clock, electric windows) are checked as per Workshop manual/Owner's manual.*

3.14.1 Assembly overview

1 - Airbag unit, front passenger side
- ❑ Removing ⇒ page 54

2 - Connector

3 - Retaining frame
- ❑ Must be replaced if airbag has triggered

4 - Torx bolt -T20-

5 - Passenger side glove box

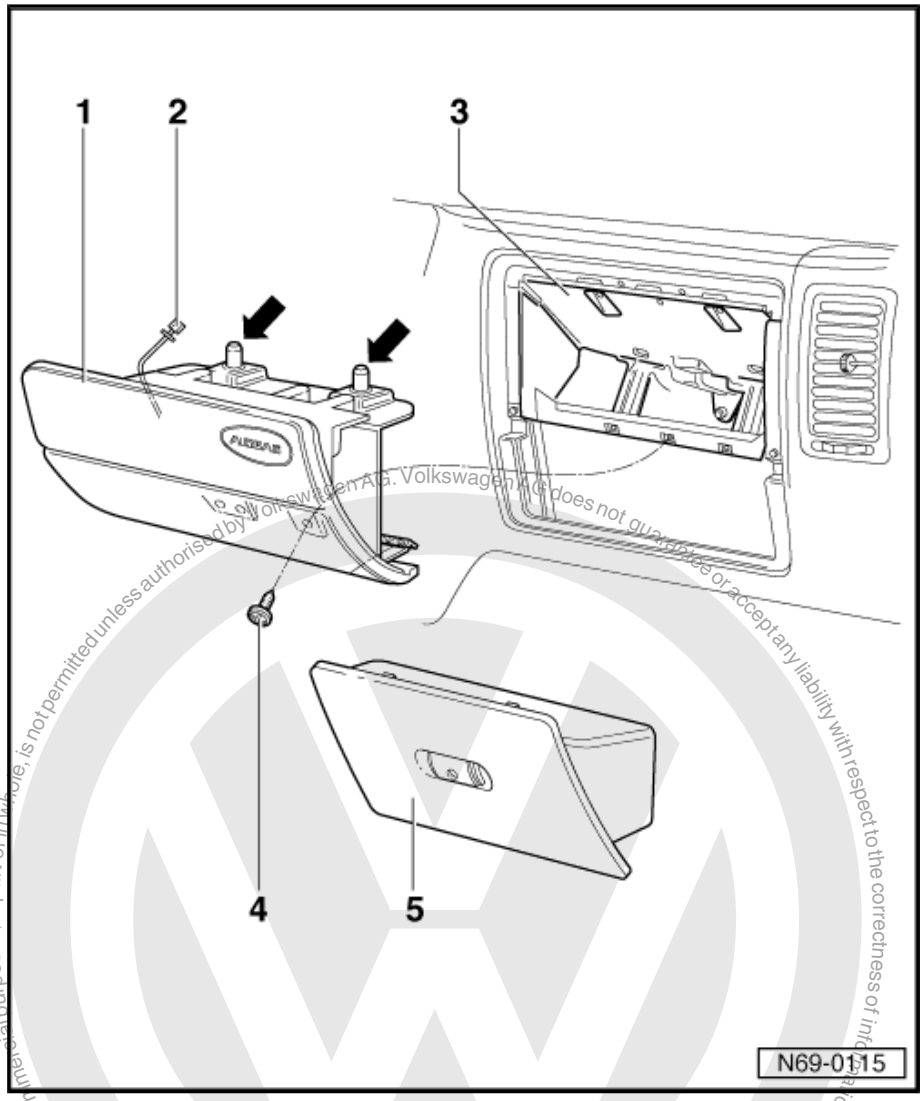

3.14.2 Removing

WARNING

Disconnect battery earth strap before working on electrical system.

Protected by copyright. Copying for private or commercial purposes, in part or in whole, is not permitted unless authorised by Volkswagen AG. Volkswagen AG does not guarantee or accept any liability with respect to the correctness of information in this document. Copyright by Volkswagen AG.
satelettronica

– Remove glove box ⇒ page 16 .

– Remove Torx screw -4-. Pull the airbag unit -1- out of the lower section of the dash panel and remove it from the supporting frame -3- (pay attention to the upper studs -arrow-).

> ⚠ **WARNING**
>
> *Electrostatic discharges may result in unintentional triggering of airbag. Therefore, the mechanic must electrostatically discharge him/herself before disconnecting the igniter and earth wires. This can be done by briefly touching the body or striker plate of the door.*

– Separate airbag unit connector -2-.

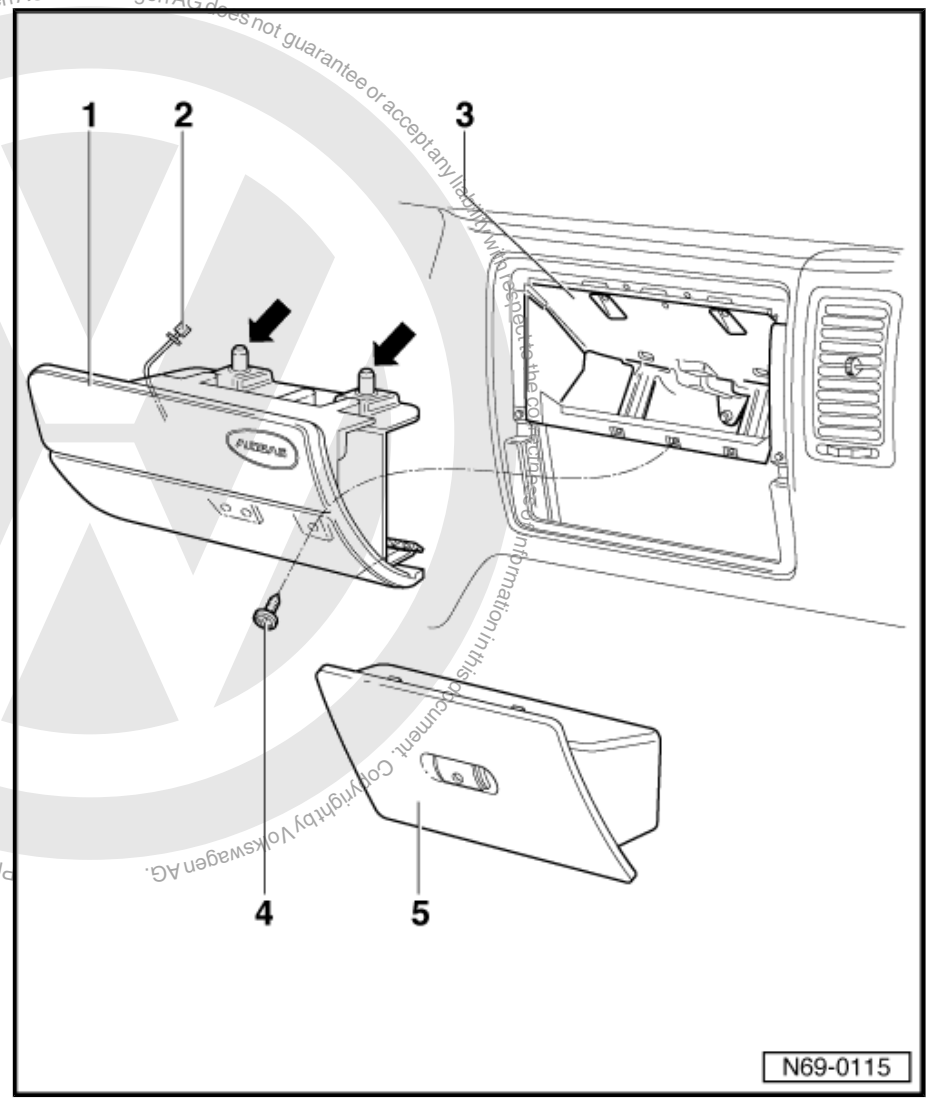

Protected by copyright. Copying for private or commercial purposes, in part or in whole, is not permitted unless authorised by Volkswagen AG. Volkswagen AG does not guarantee or accept any liability with respect to the correctness of information in this document. Copyright by Volkswagen AG.

satelettronica

3.14.3 Installing

Installation is carried out in the reverse order.

– Switch on ignition.

WARNING

Ensure that nobody is in the vehicle.

– Connect battery earth strap.

3.15 Removing and installing passenger side airbag unit 10.99 ▸

Note

- *Before disconnecting the battery see the note concerning the coding in the instruction manual for the radio.*
- *After reconnecting the battery, ensure vehicle equipment (radio, clock, electric windows) are checked as per Workshop manual/Owner's manual.*

3.15.1 Assembly overview

1 - Airbag unit, front passenger side
- ❑ Removing ⇒ page 57
- ❑ Installing ⇒ page 58 .

2 - Hexagon nut
- ❑ Qty. 4
- ❑ 8 Nm

3 - Hexagon head bolt
- ❑ Connects the airbag guide plate to the retaining frame ⇒ Item 5 (page 56) .
- ❑ Qty. 5.
- ❑ 8 Nm

4 - Dash panel

5 - Retaining frame
- ❑ Must be replaced if airbag has triggered

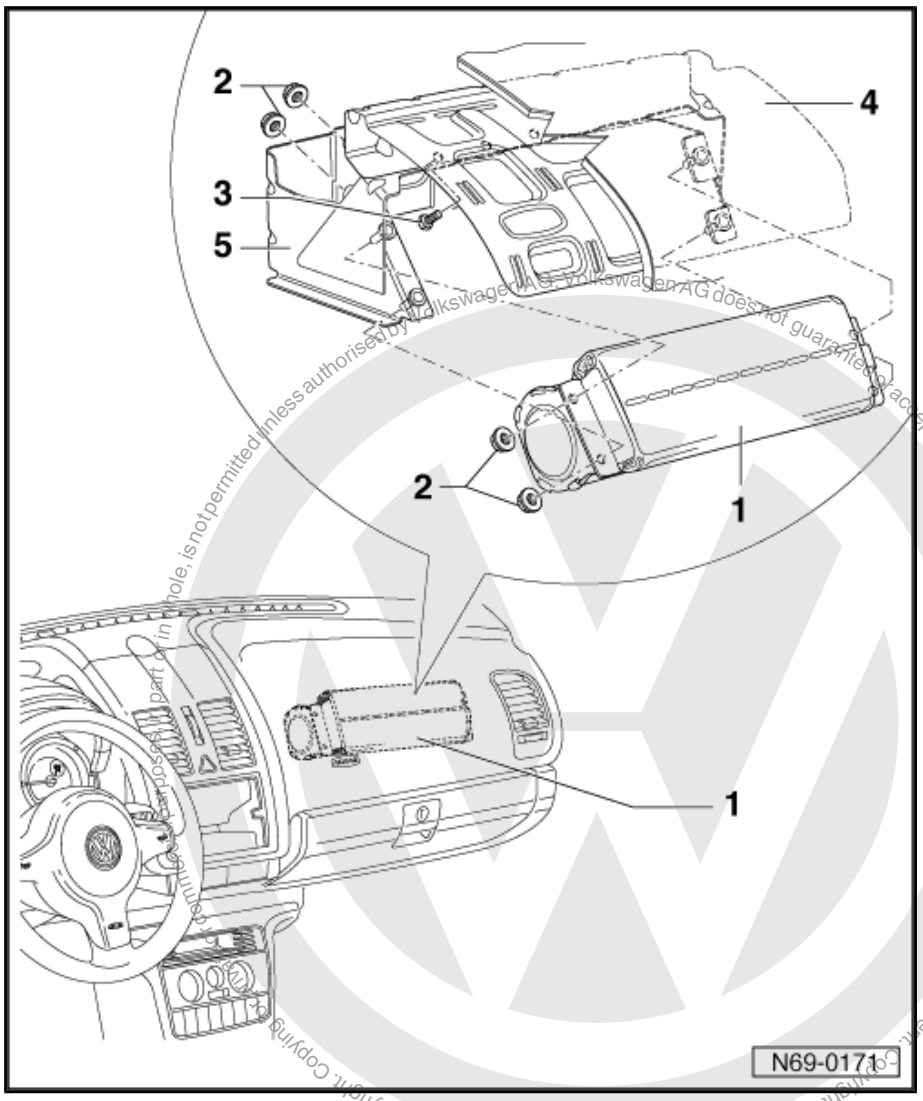

satelettronica
Protected by copyright. Copying for private or commercial purposes, in whole, is not permitted unless authorised by Volkswagen AG. Volkswagen AG does not guarantee or accept any liability with respect to the correctness of information in this document. Copyright by Volkswagen AG.

3.15.2 Removing

> ⚠ **WARNING**
>
> *Disconnect battery earth strap before working on electrical system.*

– Removing dash panel ⇒ page 72 .

> ⚠ **WARNING**
>
> *Electrostatic discharges may result in unintentional triggering of airbag. Therefore, the mechanic must electrostatically discharge him/herself before disconnecting the igniter and earth wires. This can be done by briefly touching the body or striker plate of the door.*

– Separate connector from airbag unit.

– Unscrew hexagon nuts -2- and swing airbag unit -1- out of retaining frame -5-.

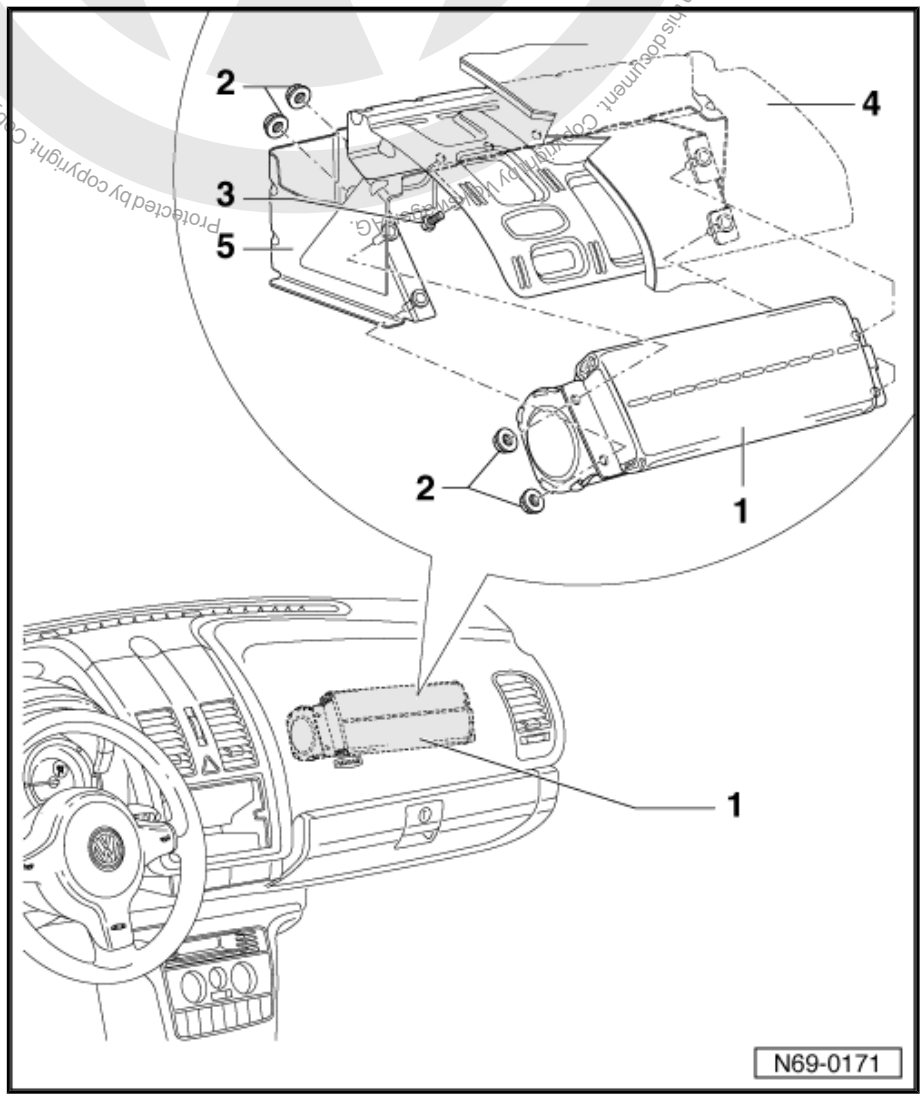

Protected by copyright. Copying for private or commercial purposes, in part or in whole, is not permitted unless authorised by Volkswagen AG. Volkswagen AG does not guarantee or accept any liability with respect to the correctness of information in this document. Copyright by Volkswagen AG.
satelettronica

Reproduction of copyrighted material for private or commercial purposes, in part or in whole, is not permitted unless authorised by Volkswagen AG. Volkswagen AG does not guarantee or accept any liability with respect to the correctness of information in this document. Copyright by Volkswagen AG.

3.15.3 Installing

– Install airbag unit and dash panel.

– Switch all electrical consumers off.

> **WARNING**
>
> *When connecting the battery earth strap ensure no person is in the vehicle.*

– Switch on ignition.

– Connect battery earth strap.

3.16 Removing and installing airbag control unit -J234-

Note

- *Obtain radio unit code before disconnecting battery.*
- *After reconnecting the battery, ensure vehicle equipment (radio, clock, electric windows) are checked as per Workshop manual/Owner's manual.*

3.16.1 Removing

> **WARNING**
>
> *Disconnect battery earth strap before working on electrical system.*

– Remove centre console ⇒ page 6 .

– Remove footwell vent ⇒ Heating, air conditioning; Rep. Gr. 80 ; Repairing heating

– If necessary, cut into floor covering and insulation mat near control unit bracket.

– Swivel bar -2- in opposite -direction of arrow- and pull connector -3- out of the control unit -1-.

– Unscrew cap nuts -4- and pull control unit off studs (cap nuts -4- = 6.5 Nm).

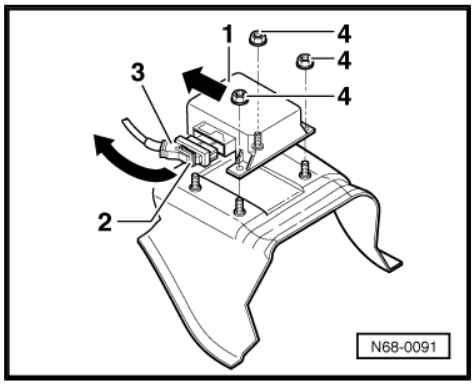

3.16.2 Installing

– Installation is carried out in reverse order of removal.

– Switch on ignition.

satelettronica

Protected by copyright. Copyright by Volkswagen AG. Volkswagen AG does not guarantee or accept any liability with respect to the correctness of information in this document. Copyright by Volkswagen AG. ...ittted unless authorised by Volkswagen AG. ...purposes, part or in whole, is not ...

WARNING

When connecting the battery earth strap ensure no person is in the vehicle.

- Connect battery earth strap.

3.17 Removing and installing driver and front passenger side airbag 10.99 ▸

Note

- *Before disconnecting the battery see the note concerning the coding in the instruction manual for the radio.*
- *After reconnecting the battery, ensure vehicle equipment (radio, clock, electric windows) are checked as per Workshop manual/Owner's manual.*

3.17.1 Assembly overview

1 - Driver/passenger side airbag

- ❑ Removing ⇒ page 60

2 - Bolt

- ❑ 7 Nm

3 - Connector

4 - Backrest frame

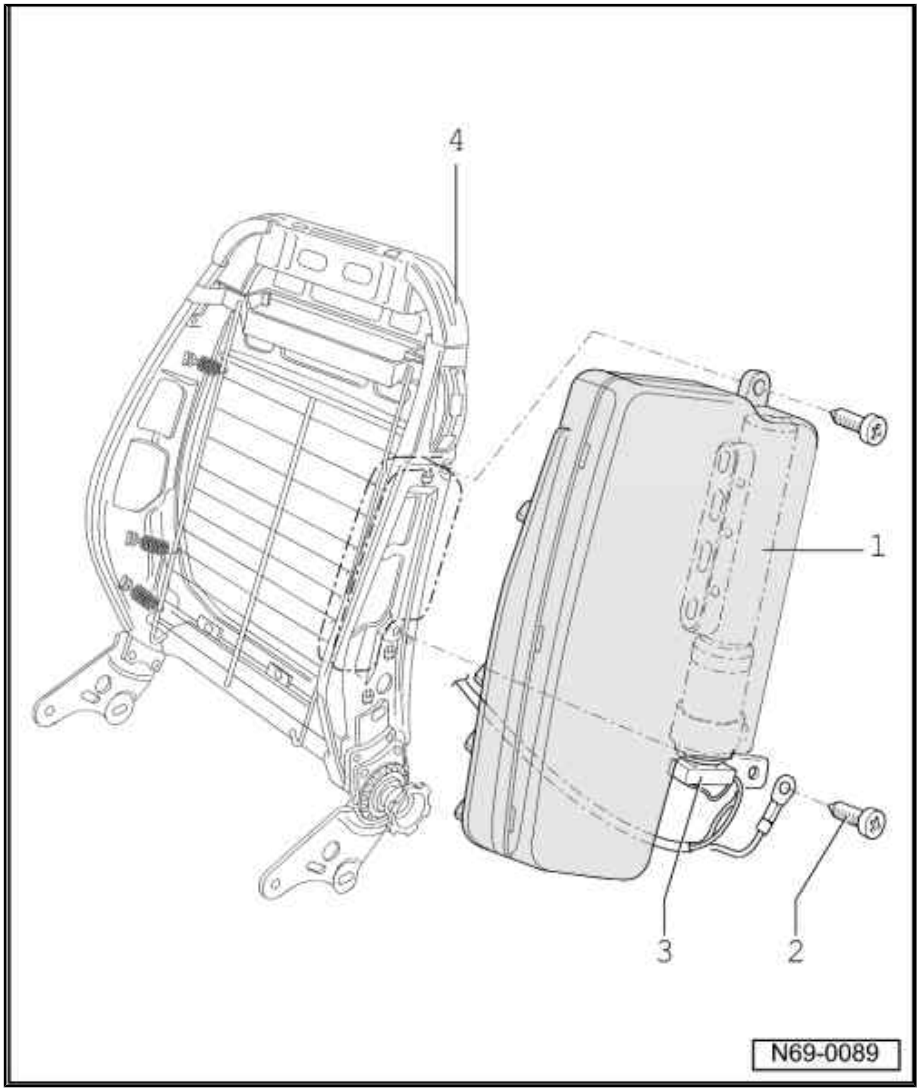

satelettronica

3.17.2 Removing

Protected by copyright. Copying for private or commercial purposes, in part or in whole, is not permitted unless authorised by Volkswagen AG. Volkswagen AG does not guarantee or accept any liability with respect to the correctness of information in this document. Copyright by Volkswagen AG.

WARNING

Disconnect battery earth strap before working on electrical system.

- Remove driver or passenger seat (use airbag adapter - VAS 5094-) ⇒ page 135 .
- Remove backrest ⇒ page 137 and release backrest cover in area of airbag -1-.
- Remove bolts -2- (7 Nm).

WARNING

Electrostatic discharges may result in unintentional triggering of airbag. Therefore, the mechanic must electrostatically discharge him/herself before disconnecting the igniter and earth wires. This can be done by briefly touching the body or striker plate of the door.

- Pull connector -3- off airbag unit -1-.
- Pull airbag unit -1- out of backrest frame -4-.

satelettronica

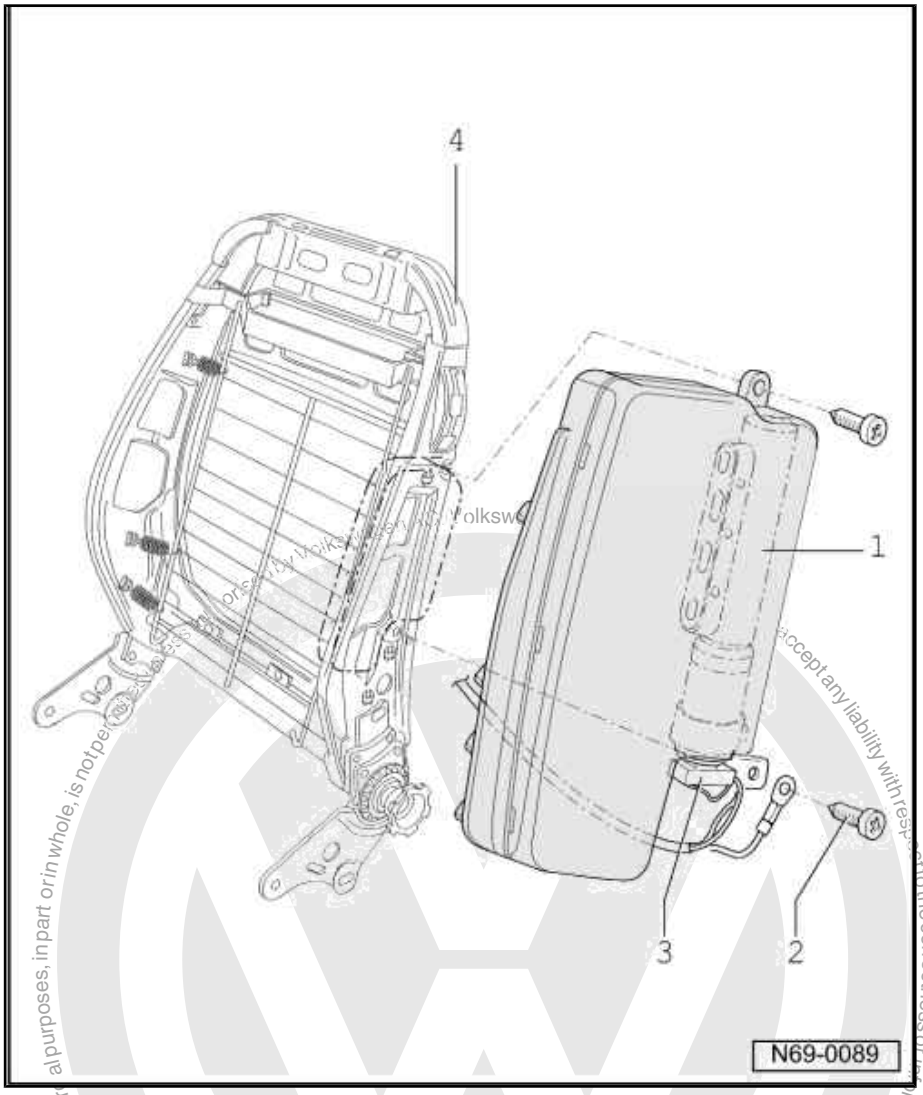

3.17.3 Installing

– Installation is carried out in reverse order of removal.
– Switch on ignition.
– Close doors.

> ⚠ **WARNING**
>
> ***When connecting the battery earth strap ensure no person is in the vehicle.***

– Connect battery earth strap.

Protected by copyright. Copying for private or commercial purposes, in part or in whole, is not permitted unless authorised by Volkswagen AG. Volkswagen AG does not guarantee or accept any liability with respect to the correctness of information in this document. Copyright by Volkswagen AG.
satelettronica

3.18 Removing and installing sensor for driver/passenger side airbag 10.99 ▸

Note

- *Before disconnecting the battery see the note concerning the coding in the instruction manual for the radio.*
- *After reconnecting the battery, ensure vehicle equipment (radio, clock, electric windows) are checked as per Workshop manual/Owner's manual.*

3.18.1 Assembly overview

1 - Sensor, driver's/front passenger's

❑ Removing ⇒ page 62

2 - Connector

3 - Bolt

❑ 6 Nm

4 - Carpet

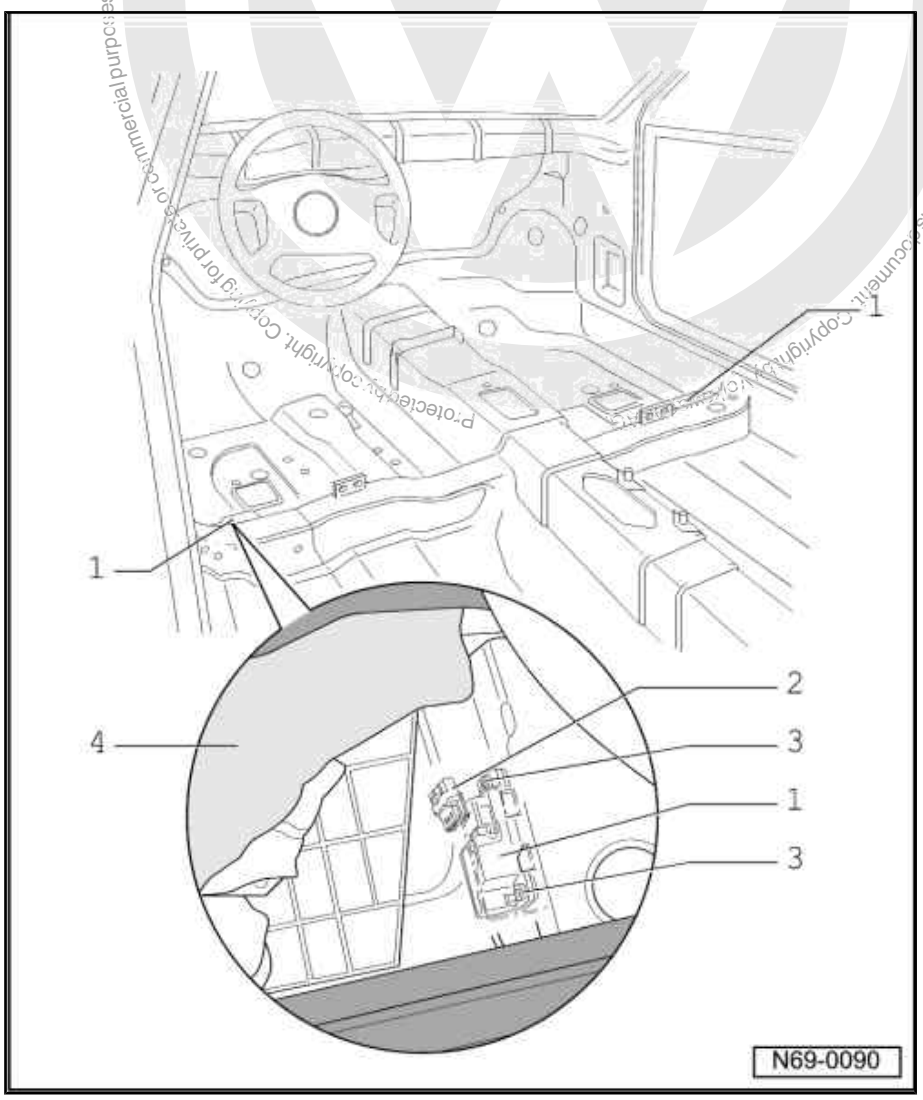

3.18.2 Removing

WARNING

Disconnect battery earth strap before working on electrical system.

Protected by copyright. Copying for private or commercial purposes, in part or in whole, is not permitted unless authorised by Volkswagen AG. Volkswagen AG does not guarantee or accept any liability with respect to the correctness of information in this document. Copyright by Volkswagen AG.
satelettronica

– Remove driver or passenger seat (use airbag adapter - VAS 5094-) ⇒ page 135 .

– Loosen carpet -4- and insulation mats in vicinity of sensor -1-.

> **WARNING**
>
> *Electrostatic discharges may result in unintentional triggering of airbag. Therefore, the mechanic must electrostatically discharge him/herself before disconnecting the igniter and earth wires. This can be done by briefly touching the body or striker plate of the door.*

– Disconnect connector -2- and remove bolts -3- (6 Nm).

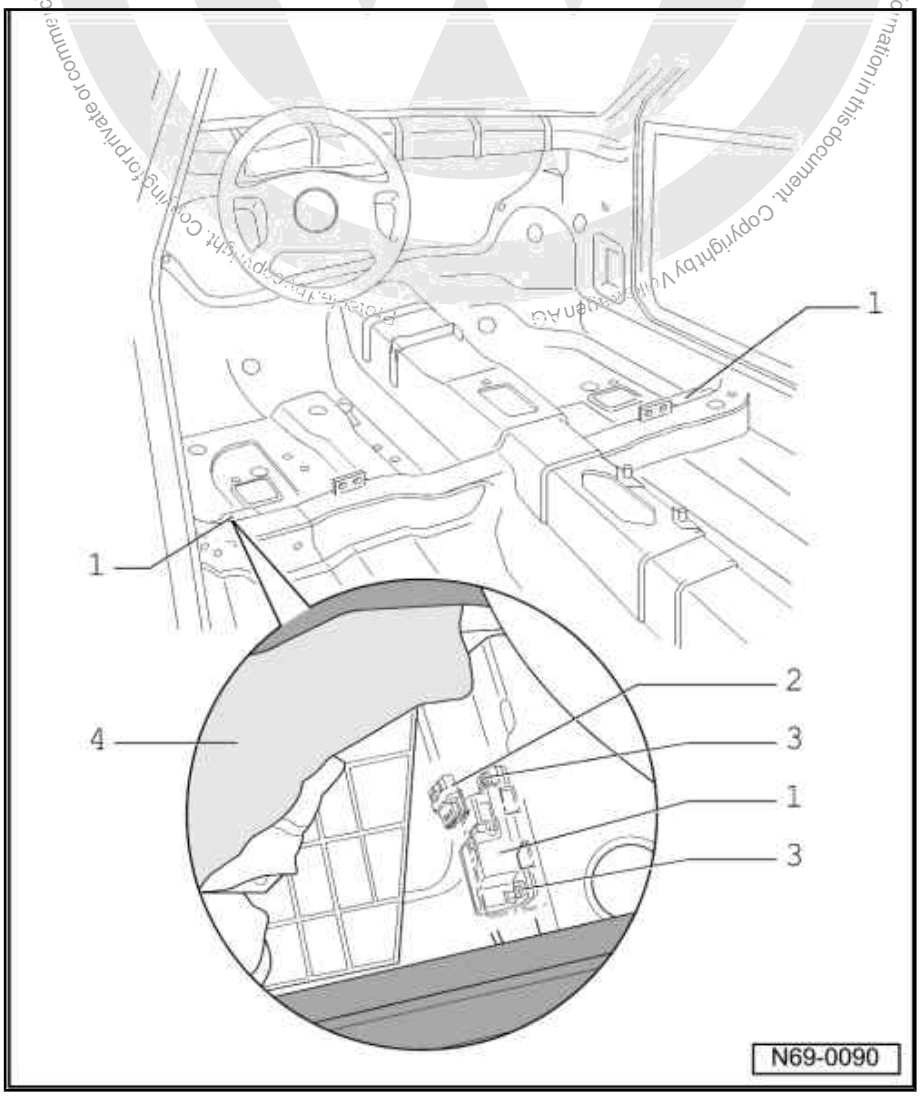

3.18.3 Installing

– Installation is carried out in reverse order of removal.

– Switch on ignition.

– Close doors.

Volkswagen AG. Volkswagen AG does not guarantee or accept any liability with respect to the correctness of information in this document. Copyright by Volkswagen AG. Copyright. Copying for private or commercial purposes, in part or in whole, is not permitted unless authorised by Volkswagen AG.
satelettronica

WARNING

When connecting the battery earth strap ensure no person is in the vehicle.

– Connect battery earth strap.

Protected by copyright. Copying for private or commercial purposes, in part or in whole, is not permitted unless authorised by Volkswagen AG. Volkswagen AG does not guarantee or accept any liability with respect to the correctness of information in this document. Copyright by Volkswagen AG.

satelettronica

70 – Trim, insulation

1 Dash panel

1.1 Tools

Special tools and workshop equipment required

- Radio release tool -3316-

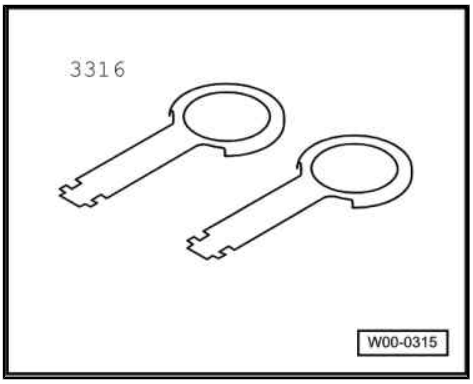

- Radio release tool -T10057-

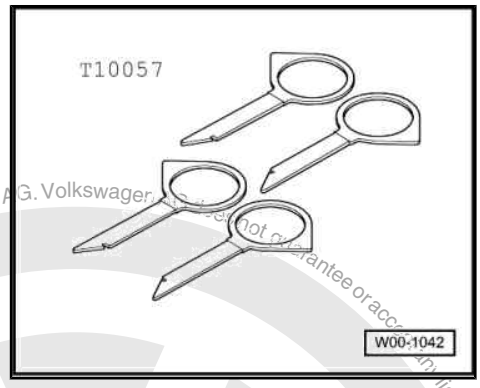

- Commercially available hook wrench with tab, DIN 1810/A, size 45/50 mm

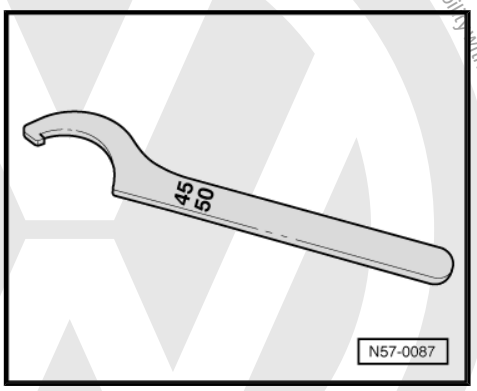

satelettronica
Protected by copyright. Copying for private or commercial purposes, in part or in whole, is not permitted unless authorised by Volkswagen AG. Volkswagen AG does not guarantee or accept any liability with respect to the correctness of information in this document. Copyright by Volkswagen AG.

1.2 Removing and installing dash panel ▸ 09.99

Protected by copyright. Copying for private or commercial purposes, in part or in whole, is not permitted unless authorised by Volkswagen AG. Volkswagen AG does not guarantee or accept any liability with respect to the correctness of information in this document. Copyright by Volkswagen AG

Note

- *Before disconnecting the battery see the note concerning the coding in the instruction manual for the radio.*
- *After reconnecting the battery, ensure vehicle equipment (radio, clock, electric windows) are checked as per Workshop manual/Owner's manual.*

1.2.1 Removing

WARNING

Disconnect battery earth strap before working on electrical system.

– Remove centre console ▸ 09.99 ⇒ page 6 .

– Remove driver side storage compartment ▸ 09.99 ⇒ page 13 .

Vehicles with driver airbag

– Remove driver side airbag unit ▸ 09.99 ⇒ page 40 .

– Unscrew cross-head bolts -5-.

– Take off lower steering column switch trim -6-.

– Unscrew hexagon nut (50 Nm) -2-.

– Position steering wheel -1- in central position (wheels straight ahead).

– Pull steering wheel -1- off steering column.

– Pull foam tube -3- off the connector -4- and separate connector.

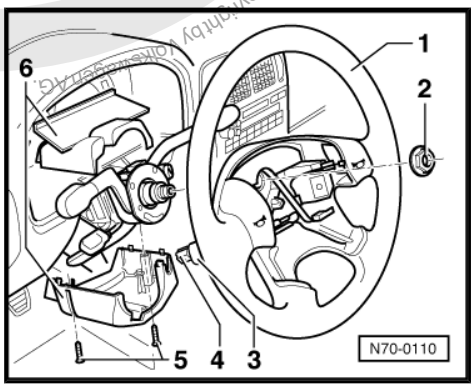

Vehicles without driver airbag

– Unclip cover -2-.

– Unscrew hexagon nut (50 Nm) -1-.

– Position steering wheel -3- in central position (wheels straight ahead).

– Pull steering wheel -3- off steering column.

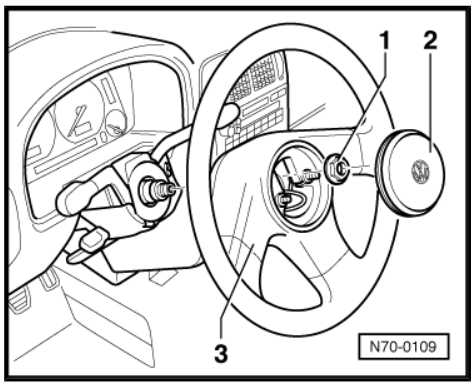

satelettronica

– Remove cross-head bolts -arrows-.
– Take off lower steering column switch trim -1-.

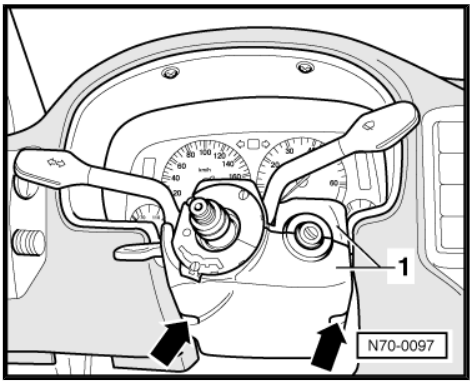

Continued for all vehicles

– Pull connectors off steering column switch -2-.
– Unscrew slotted screws -arrows- and remove steering column switch -1-.

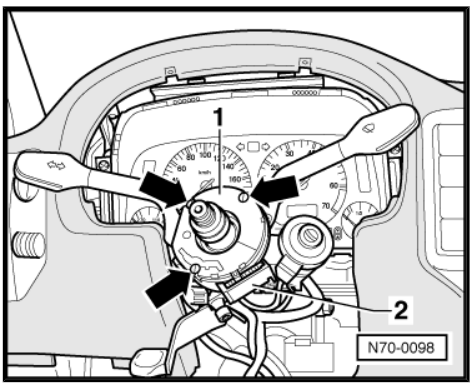

– Remove cross-head bolts -arrows-.
Pull out trim for dash panel insert.

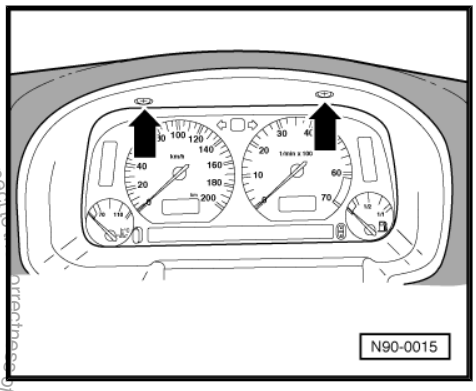

– Remove cross-head bolts -arrows-.
– Remove dash panel insert -1- from mounting bracket.
– Pull off connector.

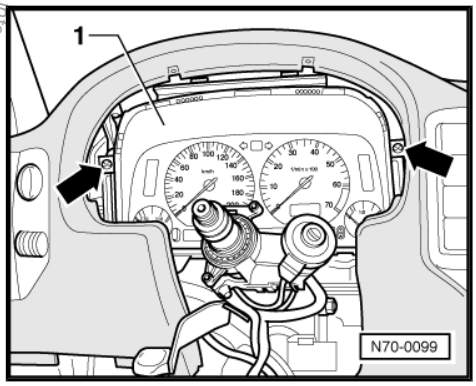

Protected by copyright. Copying for private or commercial purposes, in part or in whole, is not permitted unless authorised by Volkswagen AG. Volkswagen AG does not guarantee or accept any liability with respect to the correctness of information in this document. Copyright by Volkswagen AG.

satelettronica

– Remove left air duct -1-.

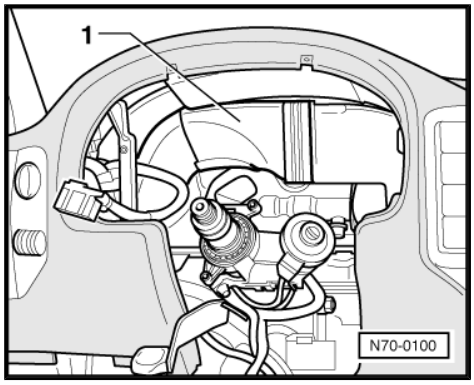

– Unscrew hexagon nut -arrow- (4 Nm).

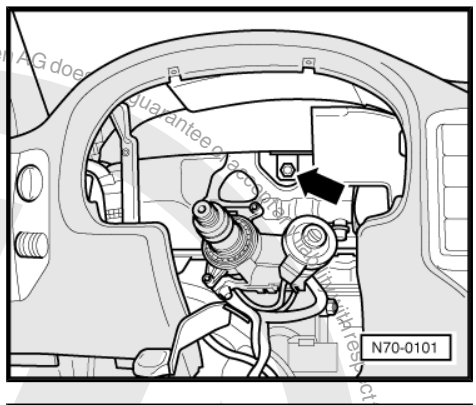

– Remove cross-head bolts -arrows-.
– Remove driver's footwell cover.

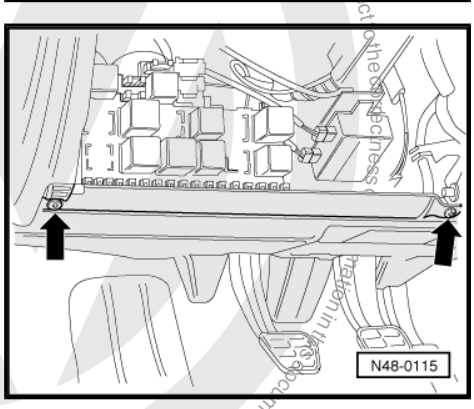

– Unscrew hexagon nut -1-.
– Remove ground lead -2-.
– Disconnect aerial cable connector -3-.
– Pull single and multi-pin connectors from dash panel wiring harness at relay plate.

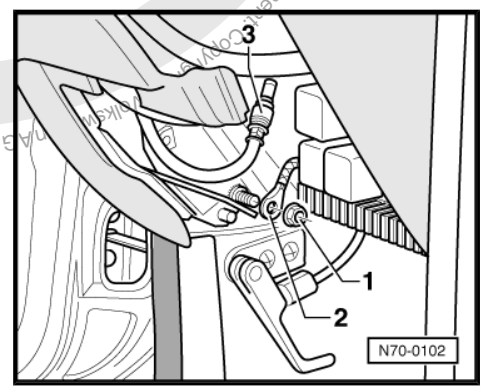

Protected by copyright. Copying for private or commercial purposes, in part or in whole, is not permitted unless authorised by Volkswagen AG. Volkswagen AG does not guarantee or accept any liability with respect to the correctness of information in this document. Copyright by Volkswagen AG.
satelettronica

– Unplug multi-pin connector -1- on A-pillar (using commercially available hook wrench) ⇒ page 65 .
– Unscrew securing ring (bayonet lock) -2-.
– Lever off cap -3-.
– Unscrew hexagon head bolt -4-.

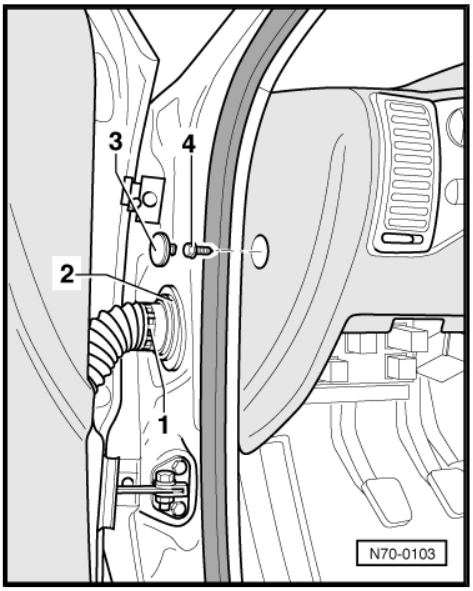

– Unclip trim -1-.

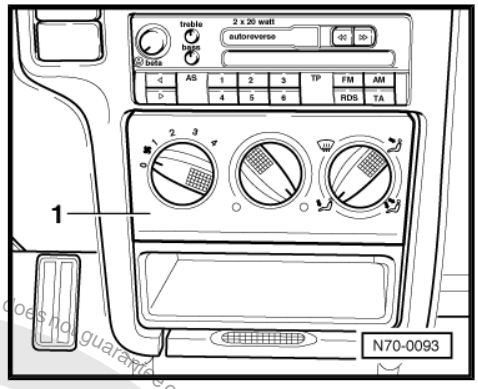

– Remove cross-head bolts -arrows-.
– Depending on equipment version, pull out storage compartment -1- or remove trim with switches (for seat heating and electric window actuators) and disconnect connectors.

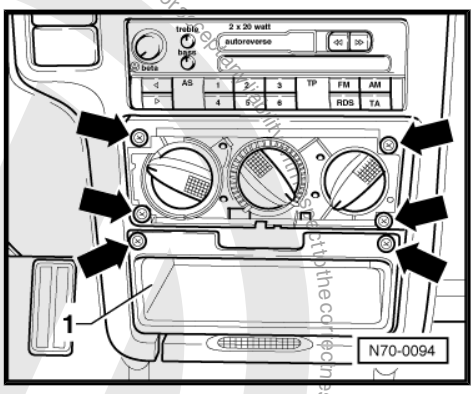

– Slide radio release tool -3316- into release slots -arrows- until they engage.

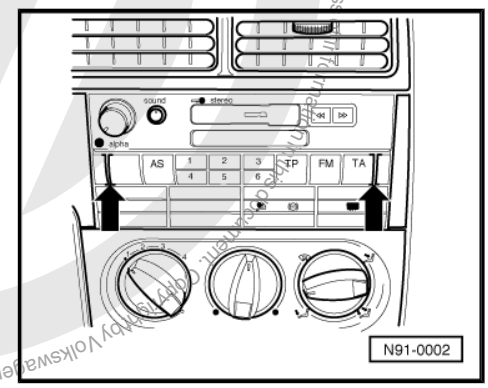

Note

- *When doing this the radio release tool -3316- must not be pushed to the side or tilted.*
- *To remove release tools from radio, press locating lugs on sides of radio inwards.*

Protected by copyright. Copying for private or commercial purposes, in part or in whole, is not permitted unless authorised by Volkswagen AG. Volkswagen AG does not guarantee or assume any liability with respect to the correctness of information. Copyright by Volkswagen AG.
satelettronica

– Pull radio out of the dash panel using the grip rings of the release tool.

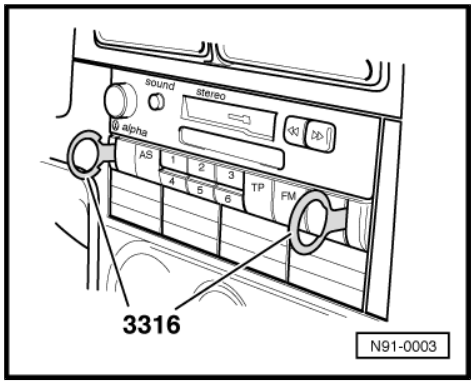

– Remove cross-head screws -1- (1.5 Nm).
– Unscrew hexagon nut -arrow-.
– Remove support -2-.

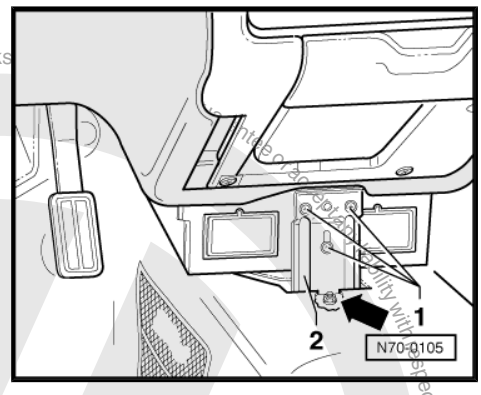

Vehicles with passenger airbag

– Remove footwell vent ⇒ Heating, air conditioning; Rep. Gr. 80 ; Repairing heating .
– Pull multi-pin connector from airbag control unit -J234- ⇒ page 58 .
– Remove bolts -arrows-.
– Pull front passenger side compartment out of dash panel.
– Vehicles with glove box ⇒ page 16 .
– Remove front passenger airbag unit ⇒ page 51 .

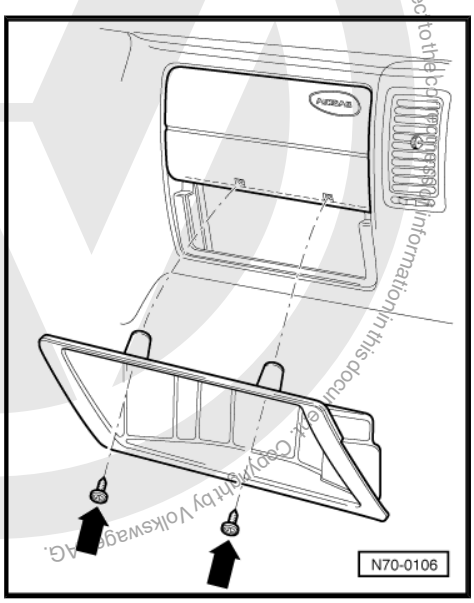

– Remove cross-head bolts -arrows-.
– Pull passenger airbag bracket -1- out of dash panel.

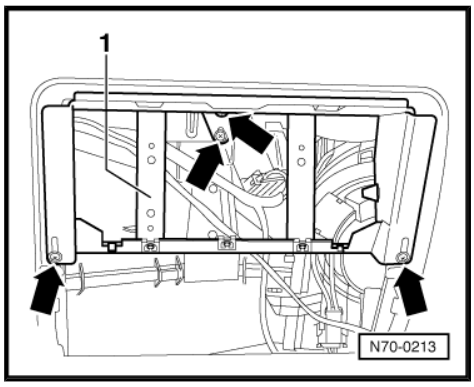

Protected by copyright. Copying for private or commercial purposes, in part or in whole, is not permitted unless authorised by Volkswagen AG. Volks
Copyright by Volkswagen AG.
satelettronica

Continued for all vehicles

– Remove right air duct -1-.

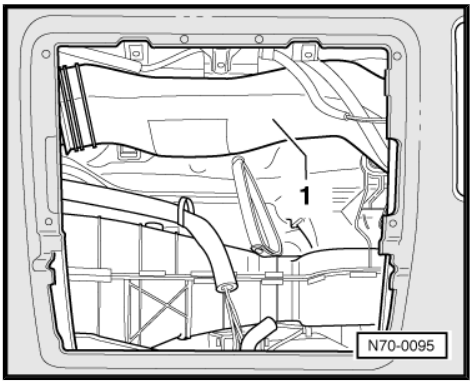

– Unscrew hexagon nuts -arrows-.

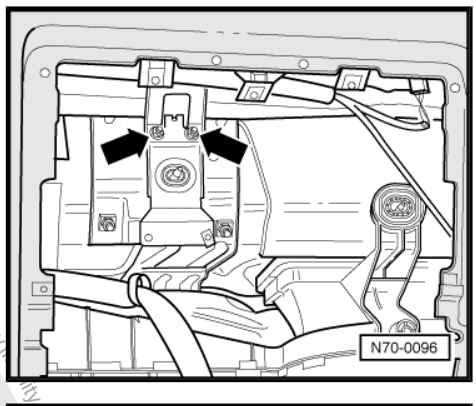

– Unscrew hexagon nut -5-.
– Remove ground lead -6-.
– Unplug multi-pin connector -3- on A-pillar (using commercially available hook wrench) ⇒ page 65 .
– Unscrew securing ring (bayonet lock) -4-.
– Lever off cap -2-.
– Unscrew hexagon head bolt -1-.
– Lift out dash panel.

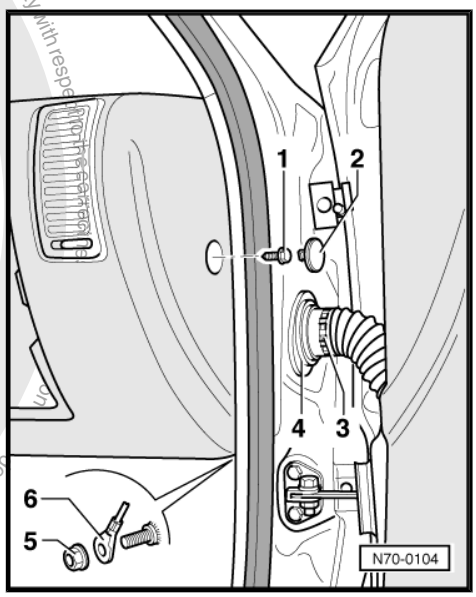

1.2.2 Installing

Installation is carried out in the reverse order.

Note

If the airbag warning lamp (K 75) signals a fault after assembling then the fault memory must be erased and interrogated again with fault reader -V.A.G 1551- ⇒ Body self-diagnosis; Rep. Gr. 01 ; Self-diagnosis for airbag systems .

Protected by copyright. Copying for private or commercial purposes, in part or in whole, is not permitted unless authorised by Volkswagen AG. Volkswagen AG does not guarantee or accept any liability with respect to the correctness of information in this document. Copyright by Volkswagen AG.
satelettronica

1.3 Removing and installing dash panel 10.99 ▸

Note

- *Before disconnecting the battery see the note concerning the coding in the instruction manual for the radio.*
- *After reconnecting the battery, ensure vehicle equipment (radio, clock, electric windows) are checked as per Workshop manual/Owner's manual.*
- *The removal and installation procedures may have to be modified slightly depending on equipment variants.*

1.3.1 Removing

WARNING

Disconnect battery earth strap before working on electrical system.

– Remove steering wheel 10.99 ▸ ⇒ page 47

– Remove steering column switches ⇒ Electrical system; Rep. Gr. 94; Steering column switches; Removing and installing steering column switches

– Remove driver side storage compartment 10.99 ▸ ⇒ page 15 .

– Remove centre console 10.99 ▸ ⇒ page 6 .

– Remove glove box 10.99 ▸ ⇒ page 17 .

– Remove bolt -1-.

– Unclip upper part of instrument trim panel -2- in -direction of arrow-.

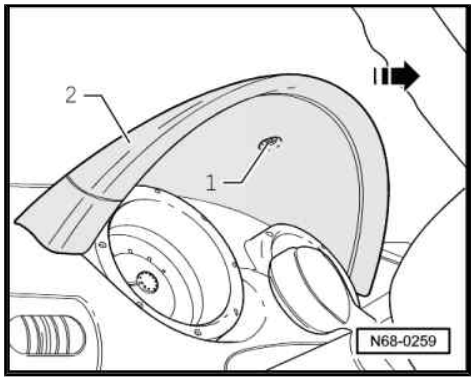

– Remove three screws -arrows-.

– Remove instrument trim panel -1-.

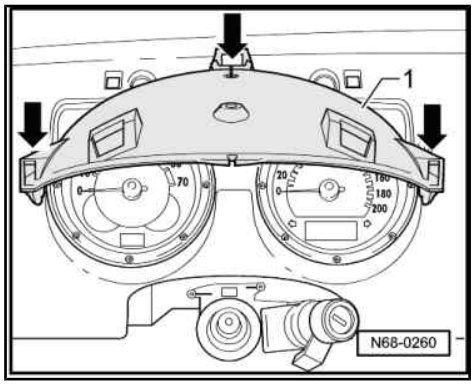

Protected by copyright. Copyright by Volkswagen AG. Volkswagen AG does not guarantee or accept any liability with respect to the correctness of information in this document. Copyright by Volkswagen AG. Unless authorised by Volkswagen AG, this document is intended for personal and internal purposes, in part or in whole, only.
satelettronica

– Remove two bolts -arrows-.
– Remove instrument cluster.
– Unplug connector.

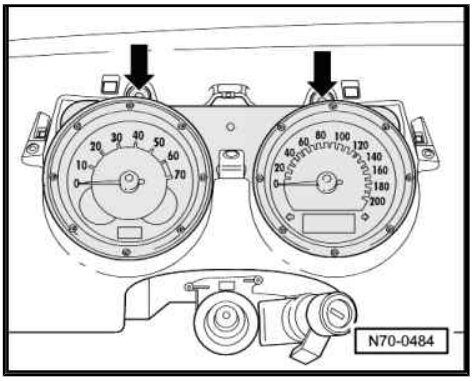

– Unscrew hexagon nuts -arrows-.

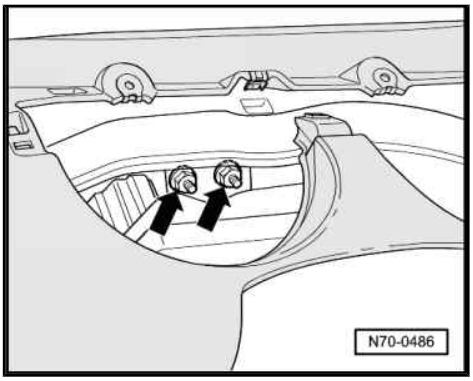

Note

The two hexagon nuts are only visible when the instrument cluster is removed.

– Press in light switch -arrow-, turn to right and pull out.
– Unplug connector.

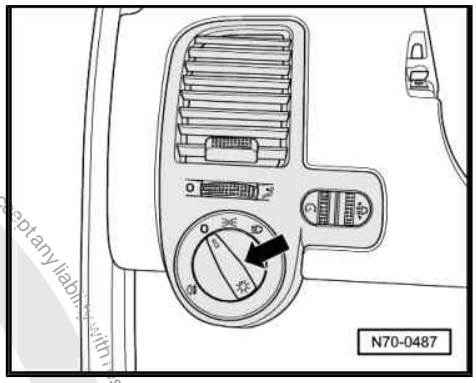

– Remove bolt -arrow-.
– Pull out driver's side vent -1-.
– Pull connector off headlight range control -2-.

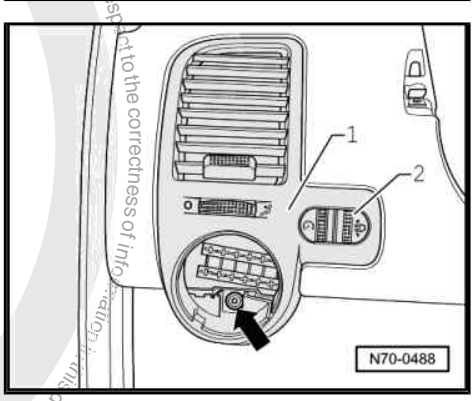

Protected by copyright. Copying for private or commercial purposes, in part or in whole, is not permitted unless authorised by Volkswagen AG. Volkswagen AG does not guarantee or accept any liability with respect to the correctness of information in this document. Copyright by Volkswagen AG.
satelettronica

– Remove bolts -1- and -2-.
– Separate cable ties -arrows-.

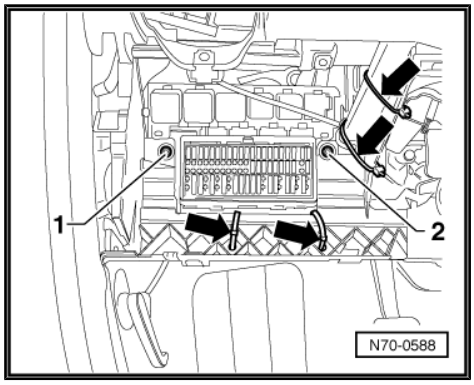

– Loosen left and right sill trim strips -1-.
– Remove bolt -2- on left and right.

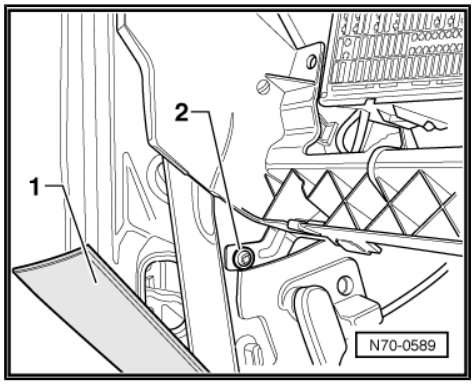

– Unclip left and right covers -1-.
– Remove bolt -2- on left and right.

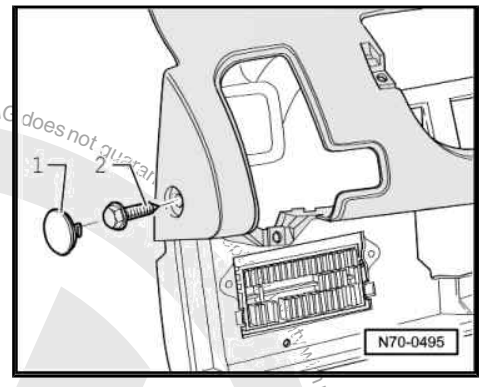

– Remove two bolts -arrows-.
– Remove driver's footwell cover.

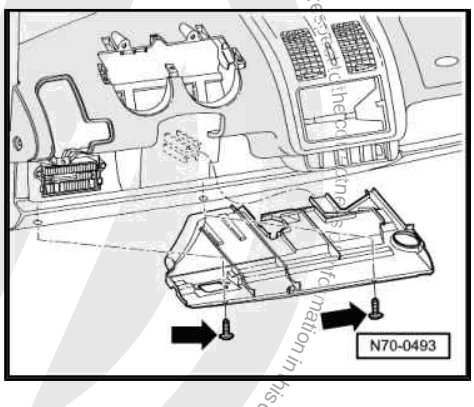

Protected by copyright. Copying for private or commercial purposes, in part or whole, is not permitted unless authorised by Volkswagen AG. Volkswagen AG does not guarantee the correctness of the technical information in this document. Copyright by Volkswagen AG.

satelettronica

– Remove two screws -1-.
– Unscrew hexagon nut -2-.
– Remove support -3-.

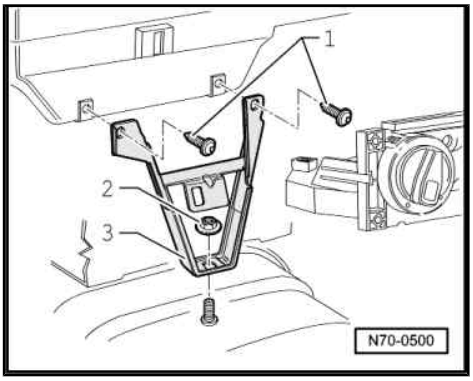

– Insert radio release tool -T10057- into the release slots until they engage.
– Pull radio out of dash panel using grip rings of release tools and separate connectors.

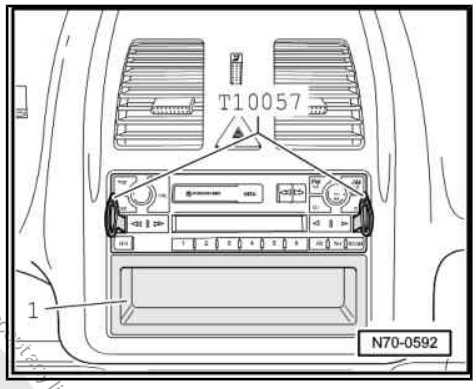

Note

- *When doing this the radio release tool -T10057- must not be pushed to the side or tilted.*
- *To remove release tools from radio, press locating lugs on sides of radio inwards.*

– Pull out compartment -1-.

– Remove three screws -arrows-.
– Remove centre vent.
– Pull connector from hazard warning light switch.

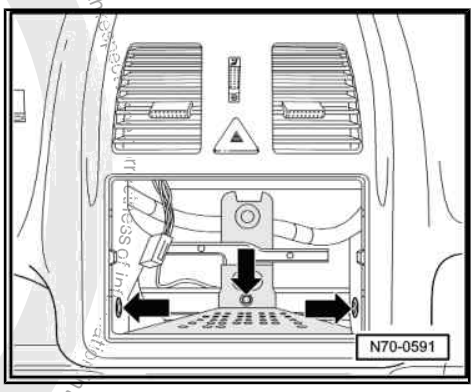

– Remove two bolts -arrows-.

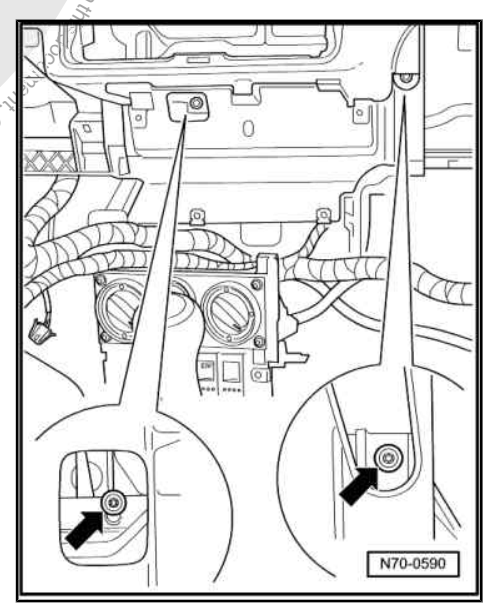

Note

The screws can be seen through the apertures, and are set back by approx. 2 cm.

Protected by copyright. Copying for private or commercial purposes, in part or in whole, is not permitted unless authorised by Volkswagen AG. Volkswagen AG does not guarantee or accept any liability with respect to the correctness of information in this document. Copyright by Volkswagen AG.
satelettronica

– Pull off rubber seal -1- upwards to centre of vehicle.
– Unclip plenum chamber cover -2- -arrows- and pull out.

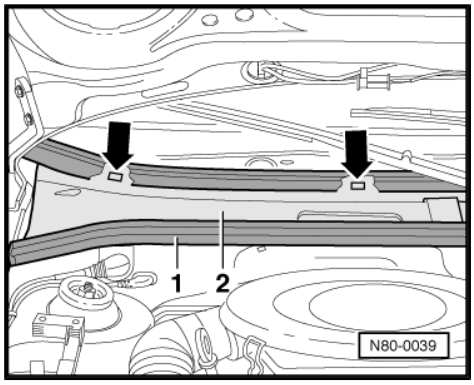

– Unclip pollen filter frame -1-.
– Remove pollen filter -2-.
– Unscrew hexagon nuts -3-.
– Remove pollen filter housing -4-.

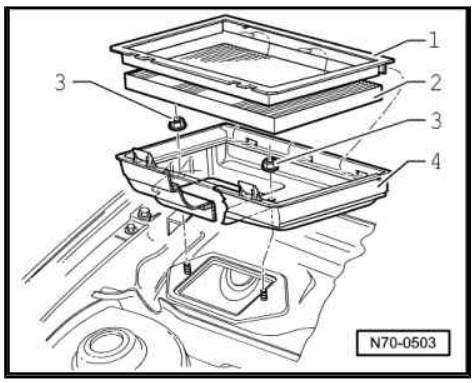

– Remove four screws -arrows-.

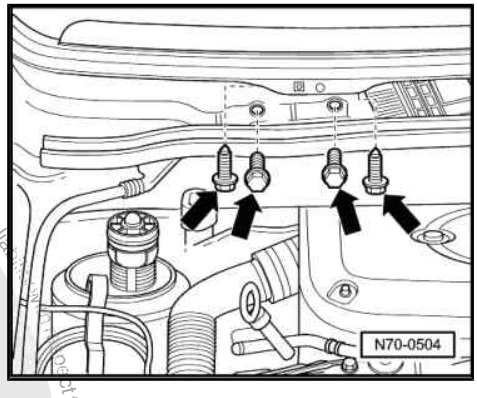

– Pull dash panel forwards.

Note

The wiring harness is secured to the dash panel by clips and cable ties. The wiring harness remains in the vehicle when removing the dash panel.

– Loosen clips, disconnect cable ties and connectors depending on vehicle equipment.
– Lift out dash panel.

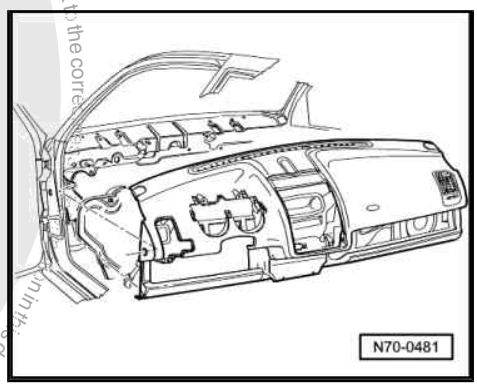

1.3.2 Installing

Installation is carried out in the reverse order.

Protected by Copyright. Copying for private or commercial purposes, in part or in whole, is not permitted unless authorised by Volkswagen AG. Volkswagen AG does not guarantee or accept any liability with respect to the correctness of information in this document. Copyright by Volkswagen AG.

satelettronica

Note

If the airbag warning lamp -K75- signals a fault after assembling then the fault memory must be erased and interrogated again with fault reader -V.A.G 1551- ⇒ Body self-diagnosis; Rep. Gr. 01 ; Self-diagnosis for airbag systems .

Protected by copyright. Copying for private or commercial purposes, in part or in whole, is not permitted unless authorised by Volkswagen AG. Volkswagen AG does not guarantee or accept any liability with respect to the correctness of information in this document. Copyright by Volkswagen AG.
satelettronica

Volkswagen AG. Volkswagen AG does not guarantee or accept any liability with respect to the correctness of information in this document. Copyright by Volkswagen AG. Protected by copyright. Copying for private or commercial purposes, in part or in whole, is not permitted unless authorised by Volkswagen AG.

2 Door trims

2.1 Tools

Special tools and workshop equipment required

- Removal pliers -3392-
- Cartridge gun -V.A.G 1628-
- Roller for fitting door insulation foil -3356-
- Removal lever -80 - 200-

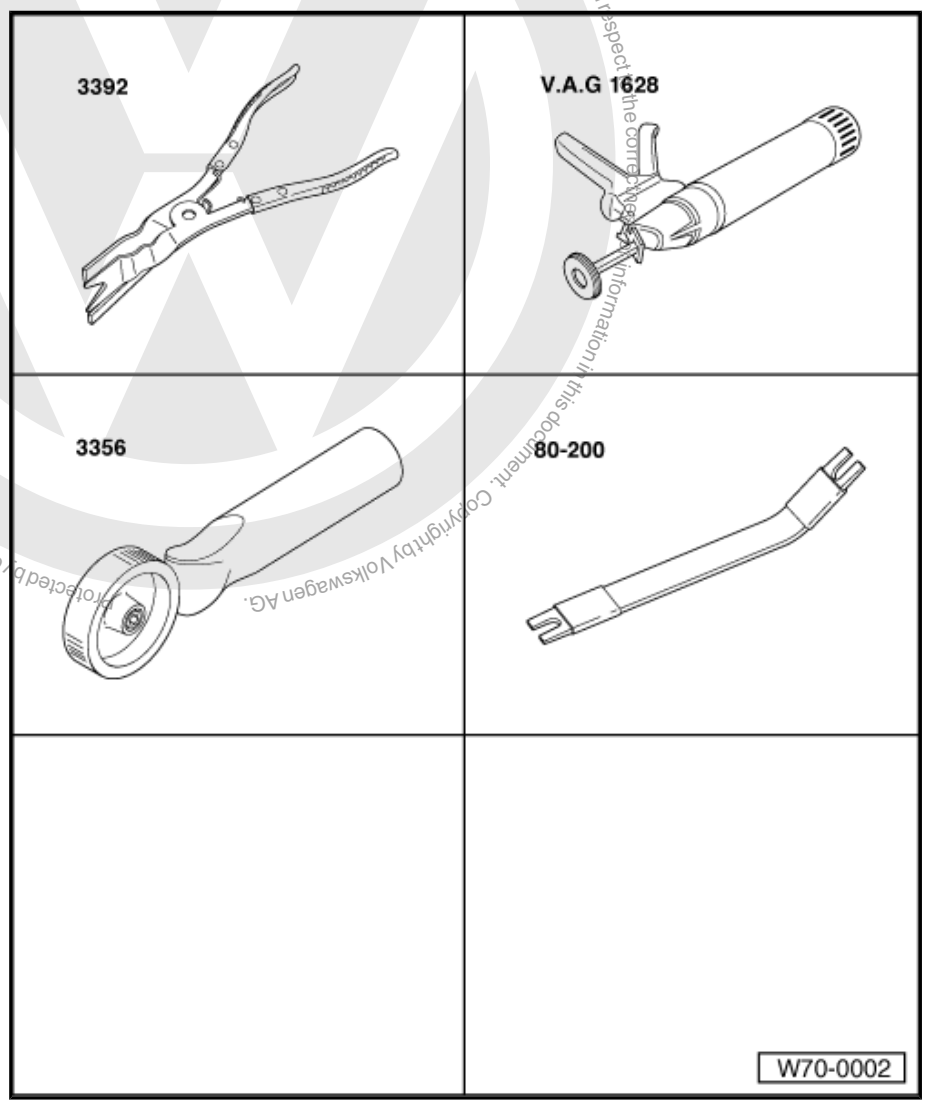

2.2 Removing and installing front door trim ▸ 09.99

Note

- *Before disconnecting the battery see the note concerning the coding in the instruction manual for the radio.*
- *After reconnecting the battery, ensure vehicle equipment (radio, clock, electric windows) are checked as per Workshop manual/Owner's manual.*

satelettronica

WARNING

Disconnect battery earth strap before working on electrical system.

Copyright by Volkswagen AG. Volkswagen AG does not guarantee or accept any liability with respect to the correctness of information. Copying for private or commercial purposes, in part or in whole, is not permitted unless authorised by Volkswagen AG.

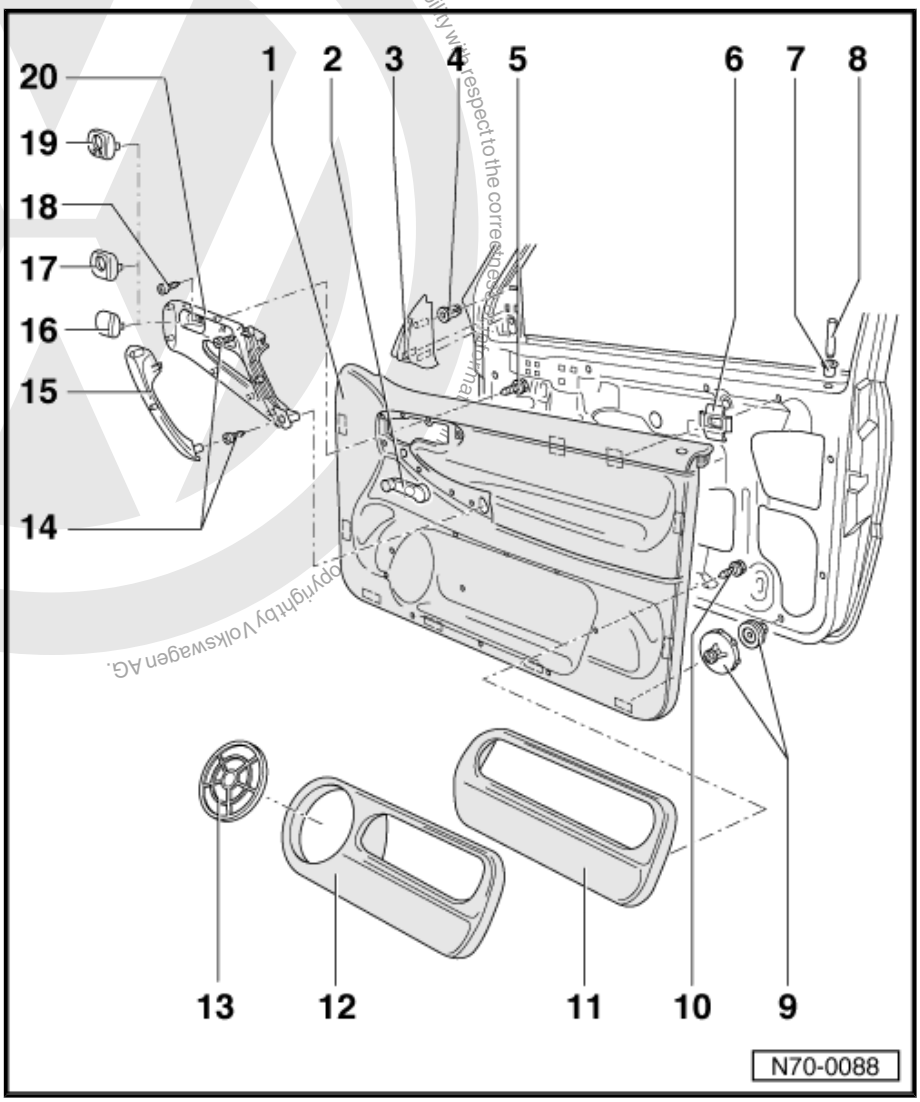

1 - Trim panel

- ❑ Removing:
- – Unclip cover ⇒ Item 3 (page 79) .
- – Unscrew locking knob ⇒ Item 8 (page 80) .
- – Removing window crank ⇒ Item 2 (page 79) ⇒ page 81 .
- – Unclip cover ⇒ Item 15 (page 80) .
- – Remove oval-head screws ⇒ Item 14 (page 80) .
- – Mechanical mirror adjustment; unclip trim ⇒ Item 17 (page 80) and unscrew oval-head screw ⇒ Item 18 (page 80) .
- – Electric mirror adjustment; unclip trim ⇒ Item 19 (page 80) and disconnect connector.
- – Lever trim out from door with removal lever -80 - 200- .
- – Disconnect electrical connections (window actuator switches, loudspeakers).

2 - Window crank

- ❑ Removing ⇒ page 81
- ❑ Installing ⇒ page 81
- ❑ Installation position with window closed 45° ± 12°.

3 - Cover

- ❑ Pull away from door frame (clipped on).

4 - Spreader clip

- ❑ Before installing cover ⇒ Item 3 (page 79) , clip into mounting hole.

5 - Bolt

- ❑ Qty. 7
- ❑ 1 Nm

satelettronica

6 - Clip

- ❑ Before installing trim, clip into mounting hole.

7 - Trim collar

8 - Locking knob

- ❑ Unscrew from locking rod.

9 - Securing clip

- ❑ Two-piece.
- ❑ Qty. 7

10 - Bolt

- ❑ Qty. eight, for securing door storage compartment ⇒ Item 11 (page 80) .
- ❑ Qty. nine, for securing door storage compartment ⇒ Item 12 (page 80) .

11 - Door storage compartment without loudspeaker mounting bracket

- ❑ Can only be removed if trim is removed first.

12 - Door storage compartment with loudspeaker mounting bracket

- ❑ Can only be removed if trim is removed first.

13 - Cover for speaker

- ❑ Clipped into door storage compartment.

14 - Countersunk screw

- ❑ Qty. 2
- ❑ 4 Nm

15 - Cover

- ❑ Clipped into door handle body.

16 - Trim

- ❑ Clipped into door handle body.

17 - Mechanical mirror adjustment trim

- ❑ Clipped into door handle body.

18 - Countersunk screw

- ❑ For securing mechanical mirror adjustment to trim.

19 - Electric mirror adjustment trim

- ❑ Clipped into door handle body.
- ❑ Removing:
- – Unclip trim and separate connector.

20 - Door handle body

- ❑ Can only be removed if trim is removed first.

Protected by copyright. Copying for private or commercial purposes, in part or in whole, is not permitted unless authorised by Volkswagen AG. Volkswagen AG does not guarantee or accept any liability with respect to the correctness of information in this document. Copyright by Volkswagen AG.
satelettronica

2.3 Removing and installing window crank ▸ 09.99

2.3.1 Removing

– Push spacer ring -2- in direction of -arrow- (releases securing clip) and pull window crank from drive.

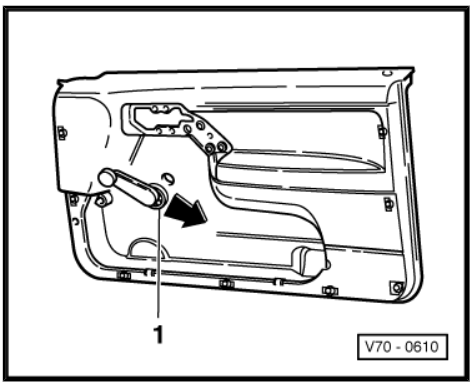

2.3.2 Installing

– Clip window crank onto drive in locked position.

The installation position with window closed is -a- = 45° ± 12°.

-Arrow- = Forwards

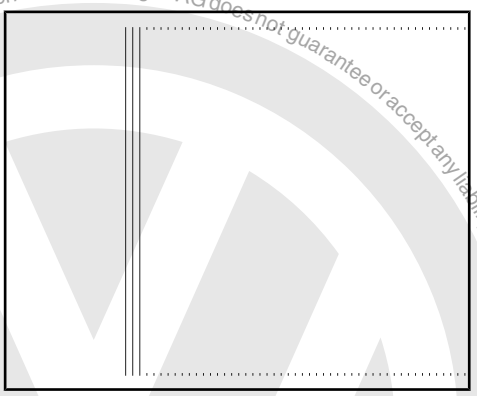

2.4 Removing and installing front door trim 10.99 ▸

Note

- *Before disconnecting the battery see the note concerning the coding in the instruction manual for the radio.*
- *After reconnecting the battery, ensure vehicle equipment (radio, clock, electric windows) are checked as per Workshop manual/Owner's manual.*
- *The removal and installation procedures may have to be modified slightly depending on equipment variants.*

2.4.1 Removing

WARNING

Disconnect battery earth strap before working on electrical system.

– Remove window crank 10.99 ▸ ⇒ page 84 .

– Remove bolt -1-.

Protected by copyright. Copying for private or commercial purposes, in part or in whole, is not permitted unless authorised by Volkswagen AG. Volkswagen AG does not guarantee or accept any liability with respect to the correctness of information in this document. Copyright by Volkswagen AG.
satelettronica

– Insert a flat screwdriver into aperture in handle and lever trim -2- out in -direction of arrow-.
– Remove bolts -3- and -4-.
– Use removal pliers -3392- to separate clip connections -arrows- and loosen door trim.
– Separate wiring connections for door components (window regulator, central locking and mirror adjustment).

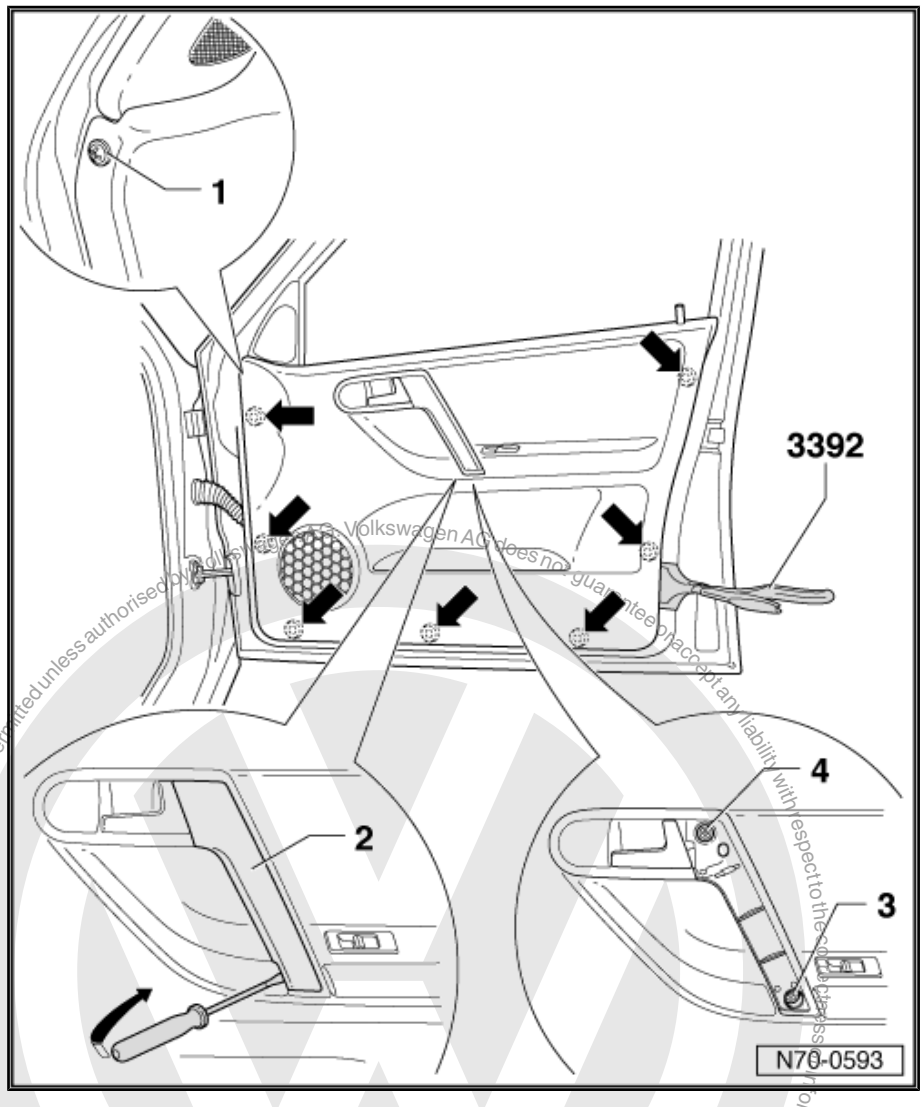

2.4.2 Installing

– Installation is carried out in the reverse order.
– Install window crank 10.99 ‣ ⇒ page 84 .

Protected by copyright. Copyright by Volkswagen AG.
Volkswagen AG does not guarantee or accept any liability with respect to the correctness of information in this document. Copyright by Volkswagen AG.
satelettronica

Note

Before installing trim, check clip connections and renew as necessary.

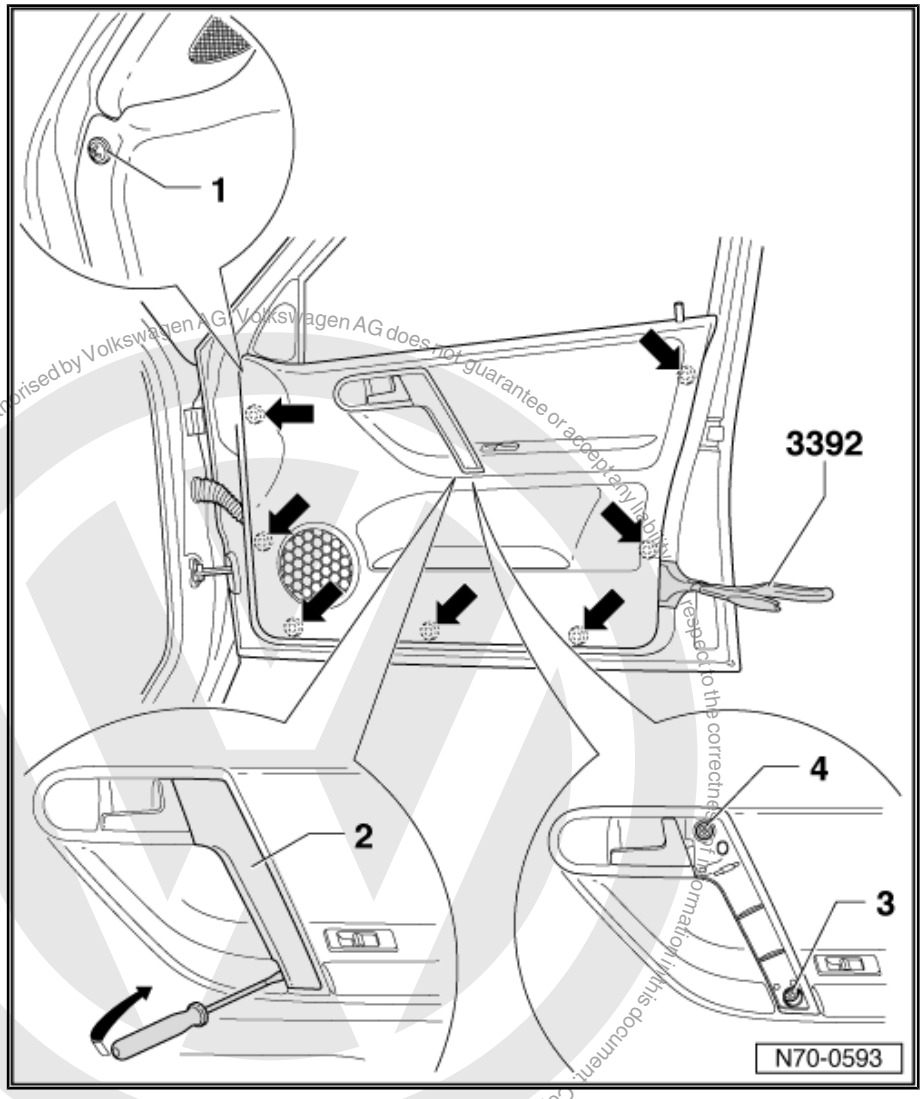

Protected by copyright. Copying for private or commercial purposes, in part or in whole, is not permitted unless authorised by Volkswagen AG. Volkswagen AG does not guarantee or accept any liability with respect to the correctness of information in this document. Copyright by Volkswagen AG.
satelettronica

2.5 Removing and installing window crank 10.99 ▸

2.5.1 Removing

– Loosen locking lugs -arrows- for trim -1- and swing trim down.
– Remove bolt -2-.
– Pull window crank -3- off from drive.

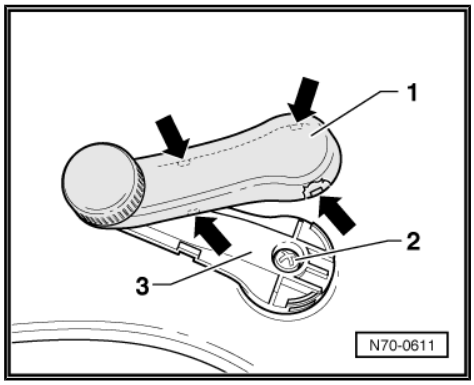

2.5.2 Installing

Note

♦ *The installation position with window closed is -a- = 45° ± 12°.*
♦ *The -arrow- in the figure indicates direction of travel.*

– Place window crank onto drive in installation position.
– Secure window crank with bolt and clip trim on.

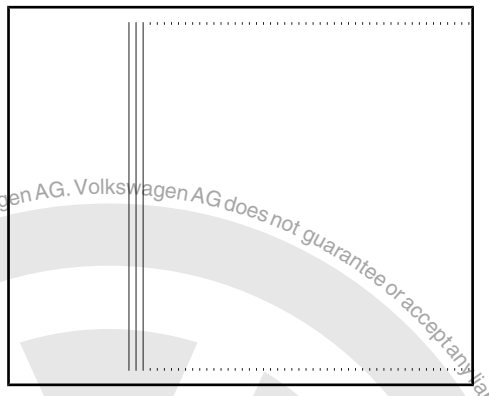

2.6 Removing and installing rear door trim ▸ 09.99

Protected by copyright. Copying for private or commercial purposes, in part or in whole, is not permitted unless authorised by Volkswagen AG. Volkswagen AG does not guarantee or accept any liability with respect to the correctness of information in this document. Copyright by Volkswagen AG.
satelettronica

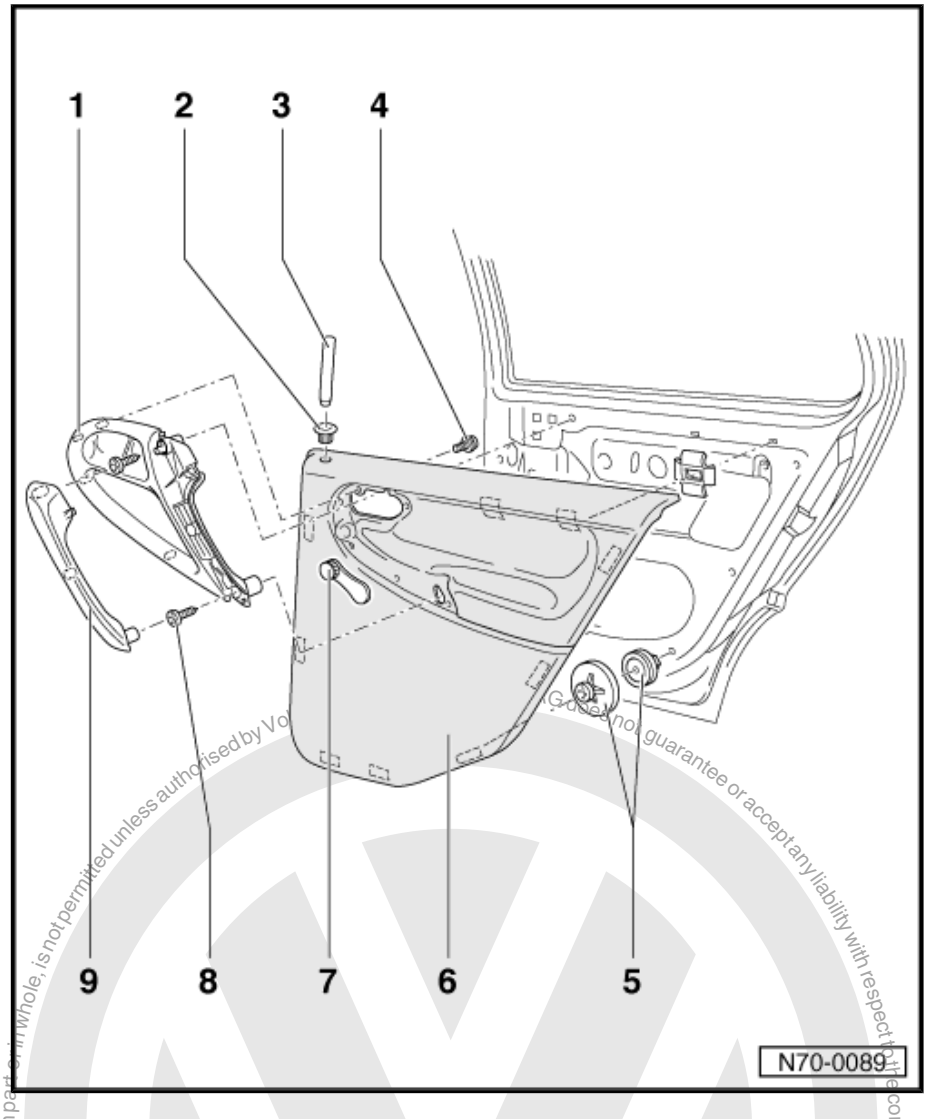

1 - Door handle body

- ❑ Can only be removed if trim is removed first.

2 - Trim collar

3 - Locking knob

- ❑ Unscrew from locking rod.

4 - Bolt

- ❑ Qty. 5.
- ❑ 1 Nm

5 - Securing clip

- ❑ Two-piece.
- ❑ Qty. 7

6 - Trim panel

- ❑ Removing:
  - – Unscrew locking knob ⇒ Item 3 (page 85) .
  - – Removing window crank ⇒ Item 7 (page 85) ⇒ page 86 .
  - – Unclip cover ⇒ Item 9 (page 85) .
  - – Remove oval-head screws ⇒ Item 8 (page 85) .
  - – Lever trim out from door with removal lever -80 - 200- .

7 - Window crank

- ❑ Removing ⇒ page 86
- ❑ Installing ⇒ page 86
- ❑ Installation position with window closed 45° ± 12°.

8 - Countersunk screw

- ❑ Qty. 2
- ❑ 4 Nm

9 - Cover

- ❑ Clipped into door handle body.

Protected by copyright. Copying for private or commercial purposes, in part or in whole, is not permitted unless authorised by Volkswagen AG. Copyright by Volkswagen AG. Gate does not guarantee or accept any liability with respect to the correctness of information in this document.
satelettronica

Protected by copyright. Copying for private or commercial purposes, in part or in whole, is not permitted unless authorised by Volkswagen AG. Volkswagen AG does not guarantee or accept any liability with respect to the correctness of information in this document. Copyright by Volkswagen AG.

2.7 Removing and installing rear door window crank ▸ 09.99

2.7.1 Removing

– Push spacer ring -2- in direction of -arrow- (releases securing clip) and pull window crank from drive. (Illustration shows front door)

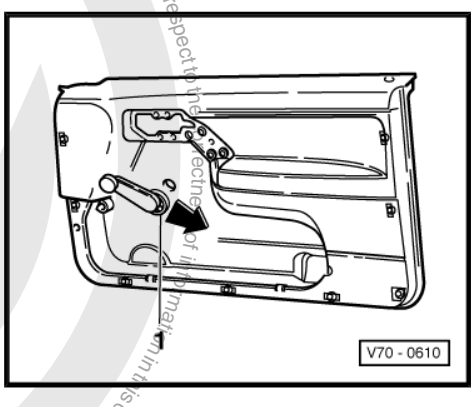

2.7.2 Installing

– Clip window crank onto drive in locked position.

The installation position with window closed is a = 45° ± 12°.

-Arrow- = Forwards

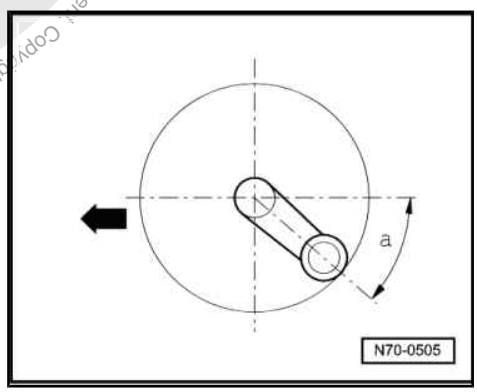

2.8 Removing and installing rear door trim 10.99 ▸

2.8.1 Removing

– Remove window crank -1- 10.99 ▸ ⇒ page 89 .

– Insert a flat screwdriver into aperture in handle and lever trim -2- out in -direction of arrow-.

– Remove bolts -3- and -4-.

– Use removal pliers -3392- to separate clip connections -arrows- and loosen door trim.

satelettronica

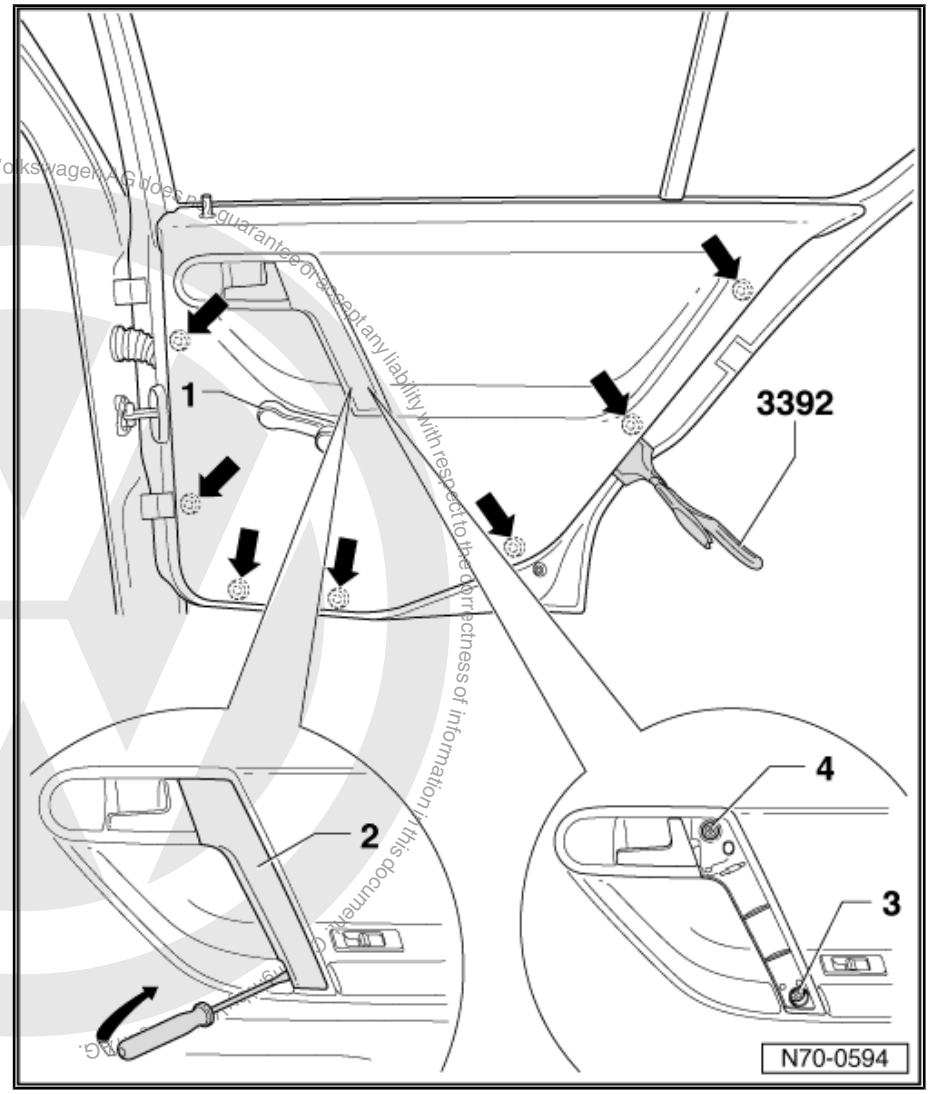

Protected by copyright. Copying for private or commercial purposes, in part or in whole, is not permitted unless authorised by Volkswagen AG. Volkswagen AG does not guarantee or accept any liability with respect to the correctness of information in this document.

satelettronica

2.8.2 Installing

Installation is carried out in the reverse order.

– Install window crank 10.99 ▸ ⇒ page 89 .

Protected by copyright. Copying for private or commercial purposes, in part or in whole, is not permitted unless authorised by Volkswagen AG. Volkswagen AG does not guarantee or accept any liability with respect to the correctness of information in this document. Copyright by Volkswagen AG.

Note

Before installing trim, check clip connections and renew as necessary.

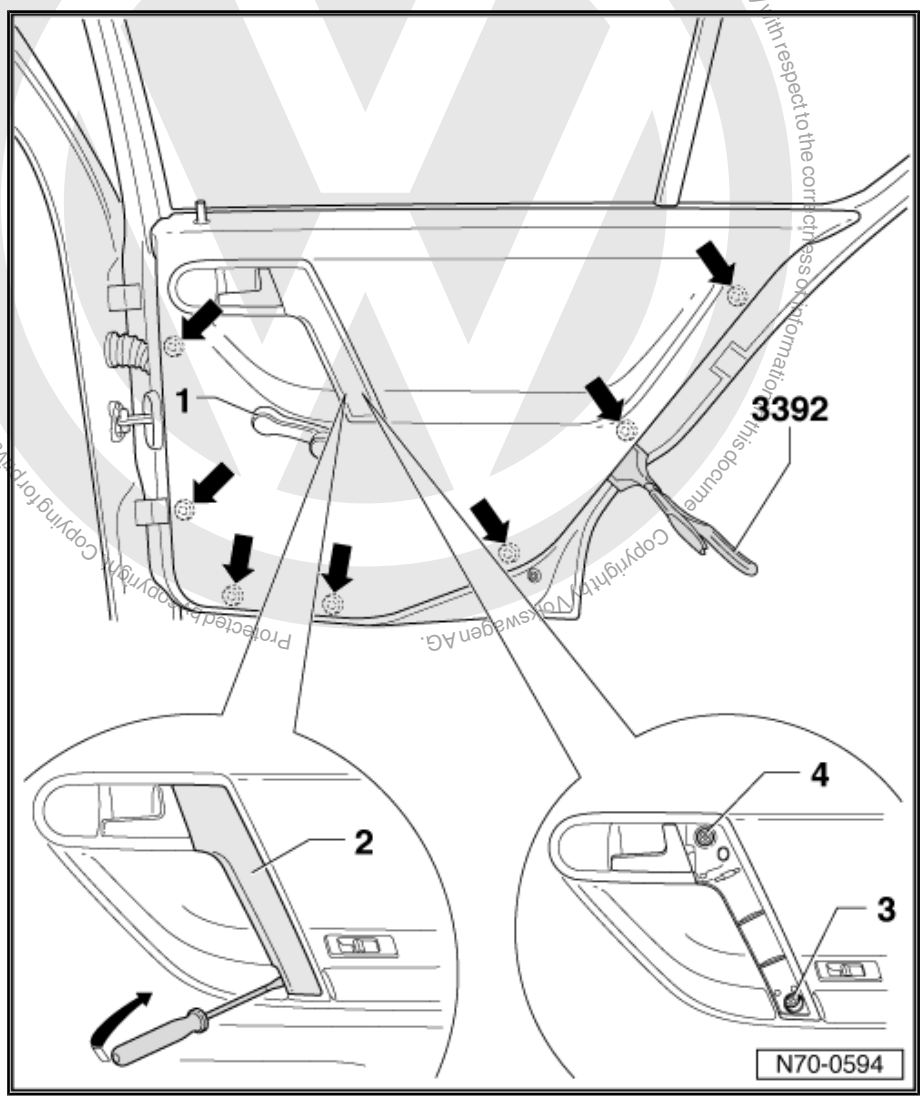

satelettronica

2.9 Removing and installing rear door window crank 10.99 ▸

2.9.1 Removing

– Loosen locking lugs -arrows- for trim -1- and swing trim down.
– Remove bolt -2-.
– Pull window crank -3- off from drive.

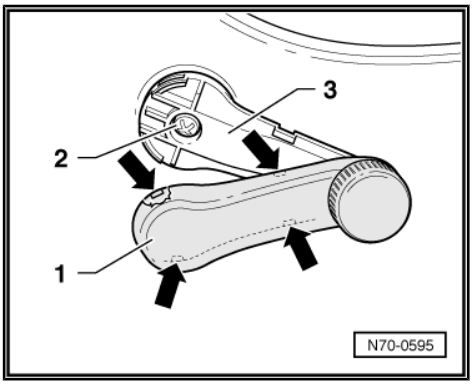

2.9.2 Installing

Note

- *The installation position with window closed is a = 45° ± 12°.*
- *The -arrow- in the figure indicates direction of travel.*

– Place window crank onto drive in installation position.
– Secure window crank with bolt and clip trim on.

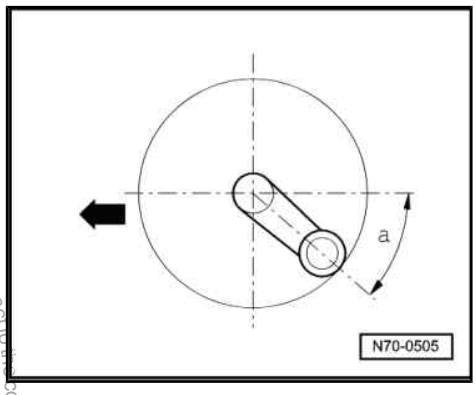

2.10 Removing and installing door insulation film

Insulation films serve to seal the vehicle's interior against noise, water ingress and drafts.

Noise insulation film can be pulled off and repositioned up to four times without applying additional adhesive, as long as the insulation film is undamaged.

Replacement insulation film was supplied ▸ 02.95 with self-adhesive properties.

Replacement insulation film from 03.95 ▸ is supplied without self-adhesive properties.

These replacement films are bonded with adhesive sealant -D 469 101 A3- .

Adhering surface: hatched area

Protected by copyright. Copyright by Volkswagen AG. Volkswagen AG does not guarantee or accept any liability with respect to the correctness of information in this document. Copying for private or commercial purposes, in part or in whole, is not permitted unless authorised by Volkswagen AG.
satelettronica

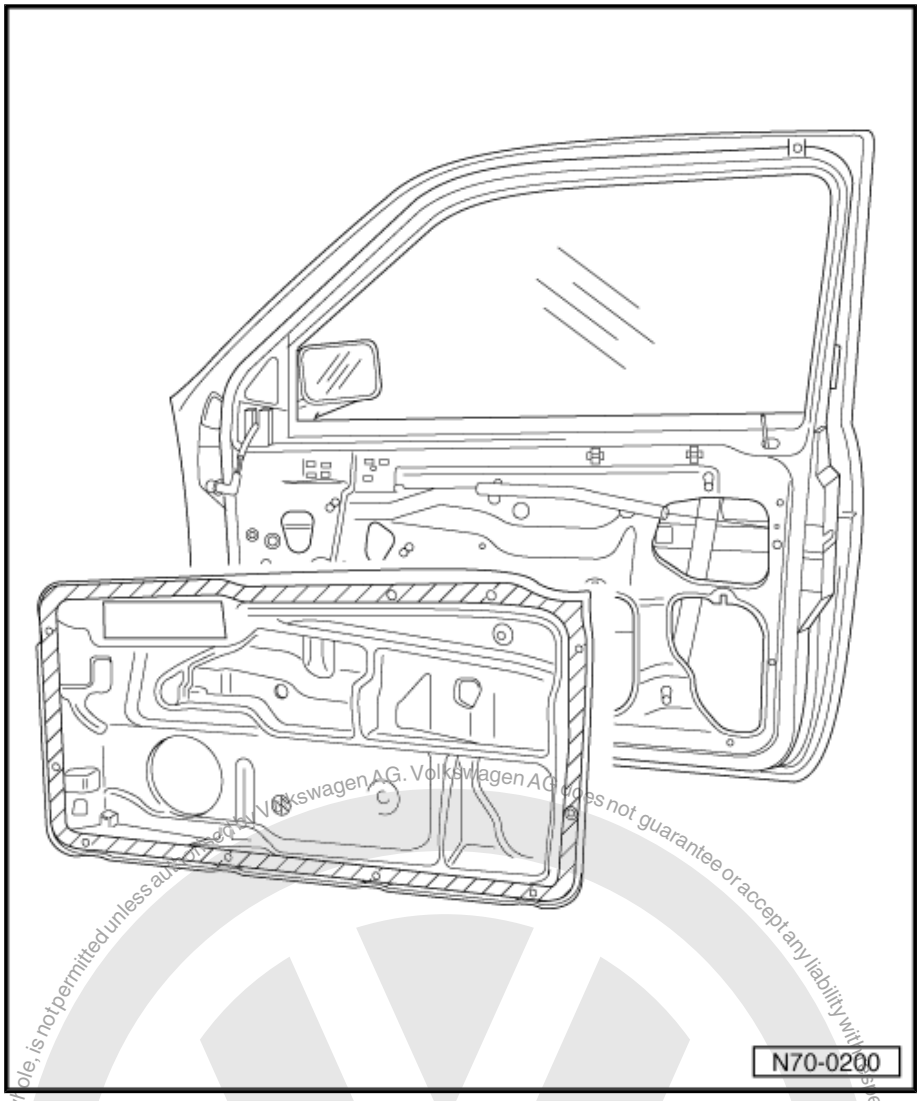

2.10.1 Removing

– Removing door trim ⇒ page 78 or ⇒ page 84 .

– Remove clip upper parts -1- -arrow-.

– Press clip lower parts -2- from door using removal pliers -3392- .

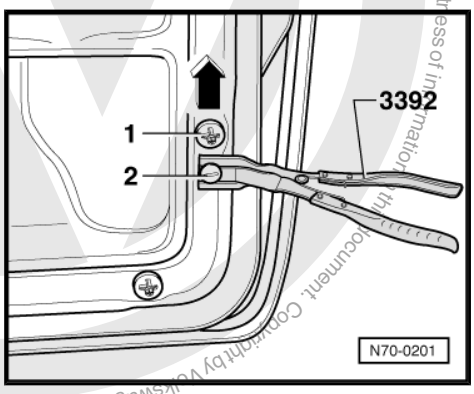

Note

Check condition of clip lower parts and renew when installing, if necessary.

Protected by copyright. Copying for private or commercial purposes, in part or in whole, is not permitted unless authorised by Volkswagen AG. Volkswagen AG does not guarantee or accept any liability with respect to the correctness of information in this document. Copyright by Volkswagen AG.
satelettronica

Vehicles with mechanical mirror adjustment

– Remove cross-head screw -1-.

– Press mechanical mirror adjustment out of fastening apertures in -direction of arrow-.

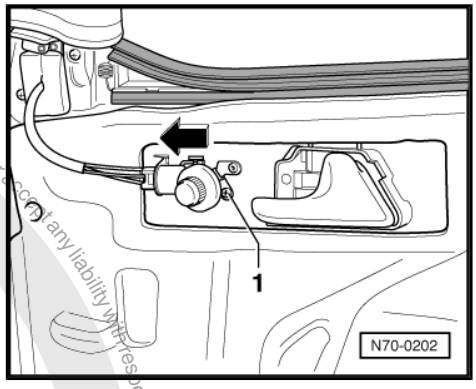

Vehicles with electric mirror adjustment

– Pull connector for electric mirror adjustment -1- out of bracket -2- in -direction of arrow- and separate.

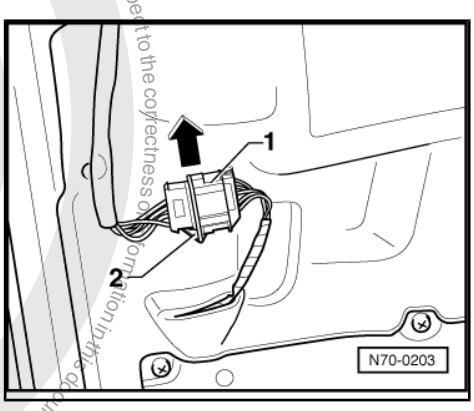

Continued for all vehicles

– Raise securing tab -1- with a screwdriver, press interior actuation out of fastening apertures in -direction of arrow-.

– Unhook linkage -2-.

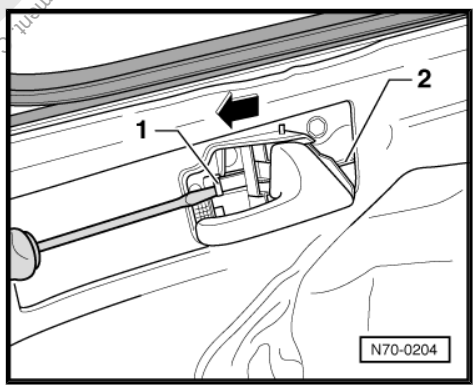

– Remove cross-head bolts -arrows-.

– Remove door speaker with cover and pull connector from speaker.

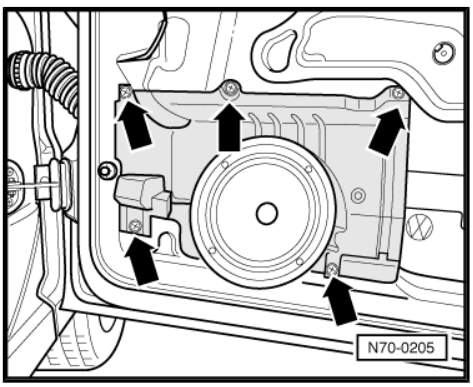

Protected by copyright. Copyright by Volkswagen AG. Volkswagen AG does not guarantee or accept any liability with respect to the correctness of information in this document. Copying for private or commercial purposes, in part or in whole, is not permitted unless authorised by Volkswagen AG.
satelettronica

– Pull off insulation foil around circumference in sections (each approx. 15 cm). When doing this, hold film as close as possible to the adhesive (shaded area).

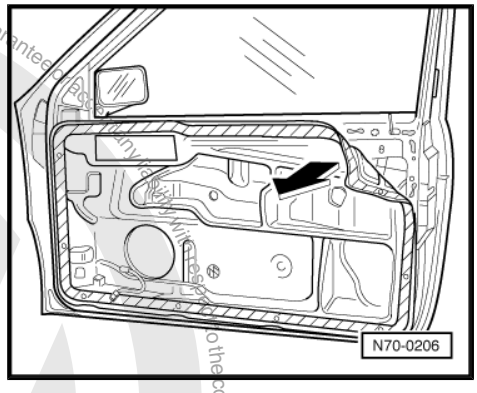

2.10.2 Installing

– If renewing noise insulation film, remove remaining adhesive on door -2-. To do this, first pull off a small section from the door and form a ball. Using this ball -1-, remove remaining adhesive from door. (Adhesive property of glue is stronger than bond with door.)

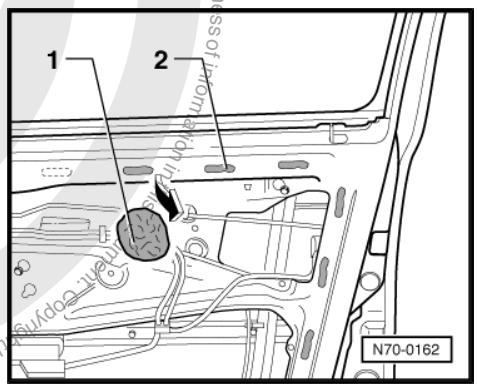

Replacement insulation film ▸ 02.95

– Insert electrical wiring connections of door inner parts (window regulator, loudspeaker and mirror adjustment) and operating rod through film and pull off protective strip of adhesive material.

– Align insulation film to apertures for assembly of fastening clips and press on.

– Press insulation film -1- bonding area (hatched area) onto door all around with roller -3356- .

– Particularly in lower area, check that insulation film is firmly adhered to door.

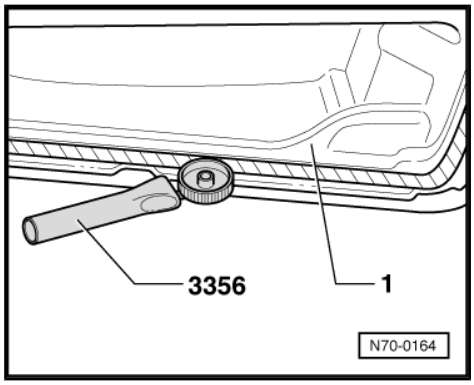

Replacement insulation film 03.95 ▸

– Using cartridge gun -V.A.G 1628- , apply adhesive sealant -D 469 101 A3- (adhesive bead ∅ approx. 5 mm) to circumference of insulation film -1- (hatched area).

– Insert electrical wiring connections of door inner parts (window regulator, loudspeaker and mirror adjustment) and operating rod through film.

– Align insulation film to apertures for assembly of fastening clips and press on.

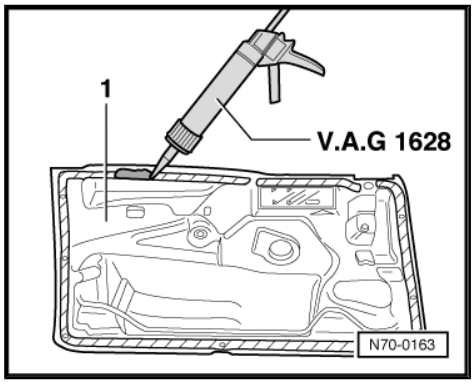

Protected by copyright. Copyright by Volkswagen AG. Volkswagen AG does not guarantee or assume any liability with respect to the correctness of information. Copying for private or commercial purposes, in part or in whole, is not permitted unless authorized by Volkswagen AG.
satelettronica

– Press insulation film -1- bonding area (hatched area) onto door all around with roller -3356- .
– Particularly in lower area, check that insulation film is firmly adhered to door.

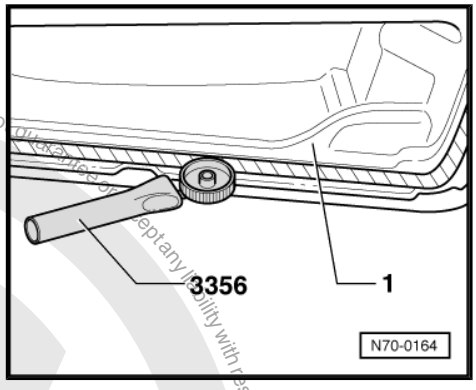

Protected by copyright. Copying for private or commercial purposes, in part or in whole, is not permitted unless authorised by Volkswagen AG. Copyright by Volkswagen AG.
Volkswagen AG does not guarantee or accept any liability with respect to the correctness of information in this document.
satelettronica

Protected by copyright. Copying for private or commercial purposes, in part or in whole, is not permitted unless authorised by Volkswagen AG. Volkswagen AG does not guarantee or accept any liability with respect to the correctness of information in this document. Copyright by Volkswagen AG.

3 Trim

3.1 Tools

Special tools and workshop equipment required

- Removal lever -80 - 200-

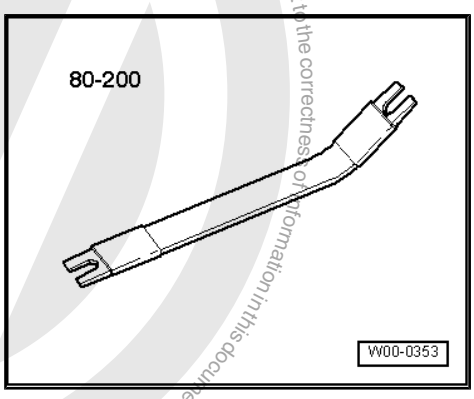

3.2 Removing and installing A-pillar trim

1 - Seal

- ❑ After installing trims, ensure seal is seated correctly.

2 - Trim panel

- ❑ Removing:
  - Pull off trim and unhook retaining lug ⇒ Item 4 (page 94) .
- ❑ Installing:
  - Check seating and condition of clips ⇒ Item 3 (page 94) and correct if necessary.
  - Hook retaining lug ⇒ Item 4 (page 94) in first.

3 - Clip

4 - Retaining lug

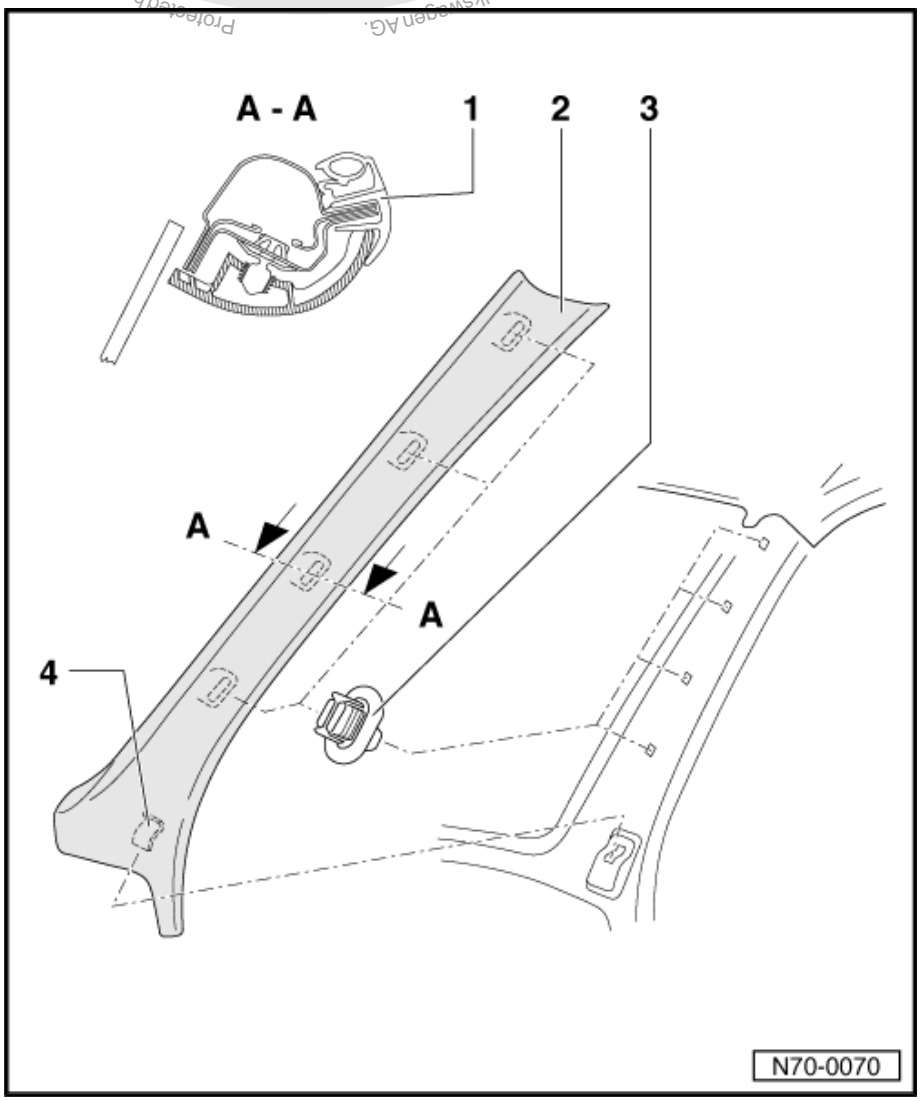

satelettronica

3.3 Removing and installing B-pillar trim ▸ 09.99

3.3.1 Two-door Polo

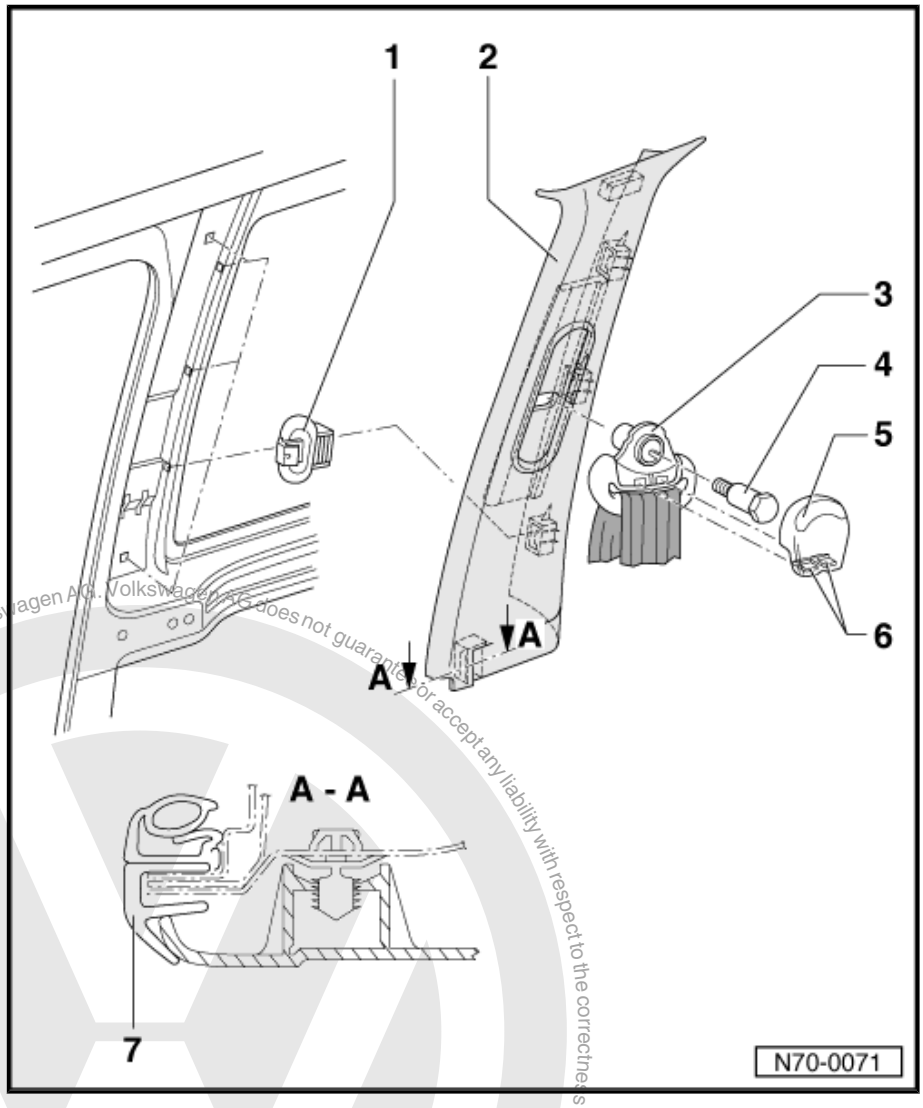

1 - Clip

- ❑ Qty. 5.
- ❑ Removing:
- – Turn clip 90° and pull out of B-pillar mounting.

2 - Trim panel

- ❑ Removing:
- – Release retaining lugs ⇒ Item 6 (page 95) and unclip cover ⇒ Item 5 (page 95) upwards.
- – Unscrew belt guide ⇒ Item 3 (page 95) .
- – Unclip trim from B-pillar, beginning on door side.
- ❑ Installing:
- – Check seating and condition of clips ⇒ Item 1 (page 95) and correct if necessary.
- – Check function of belt height adjustment.

3 - Belt anchor

4 - Hexagon head bolt

- ❑ $^{7}/_{16}$ x 20
- ❑ 40 Nm

5 - Cover

6 - Locking lug

7 - Seal

- ❑ After installing trims, ensure seal is seated correctly.

Protected by copyright. Copying for private or commercial purposes, in part or in whole is not permitted unless authorised by Volkswagen AG. Volkswagen AG does not guarantee or accept any liability with respect to the correctness of information in this document. Copyright by Volkswagen AG.
satelettronica

3.3.2 Four-door Polo

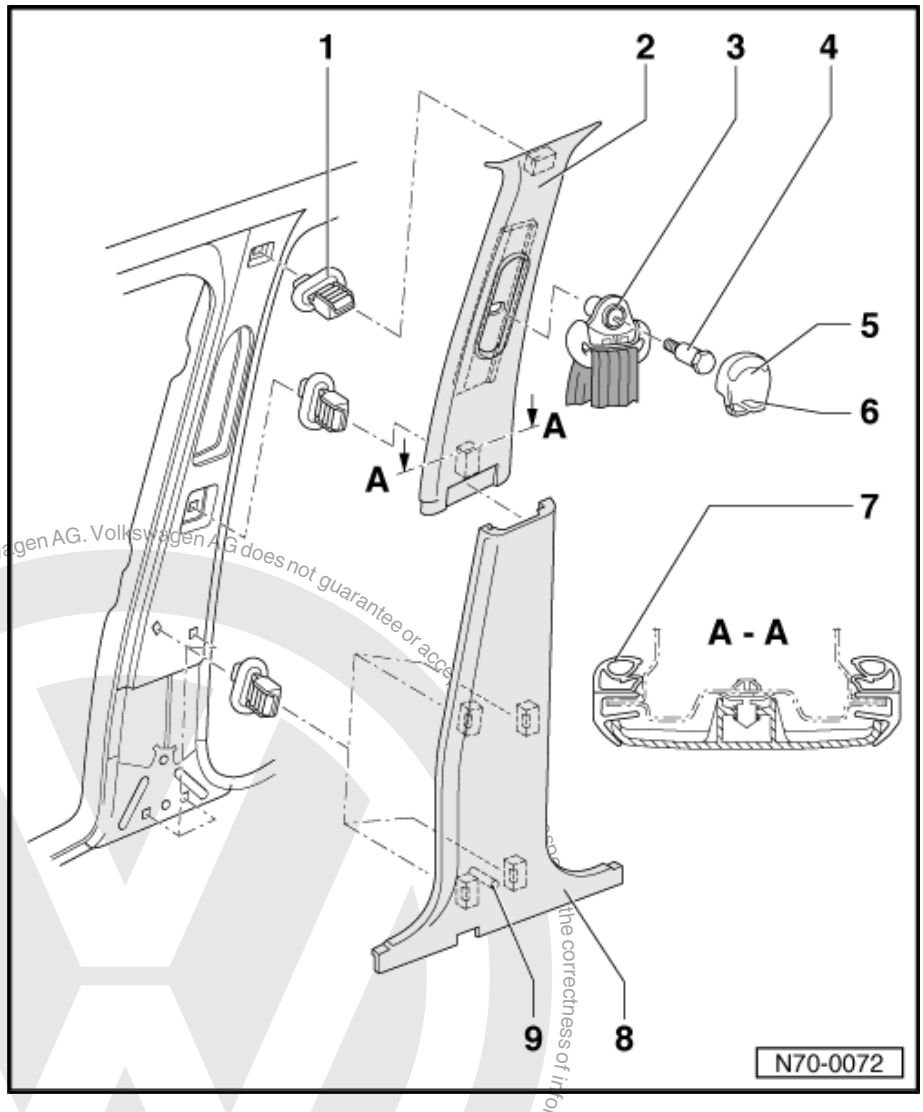

1 - Clip

- ❑ Qty. 6
- ❑ Removing:
- – Turn clip 90° and pull out of B-pillar mounting.

2 - Upper trim

- ❑ Removing:
- – Remove lower trim.
- – Release retaining lugs ⇒ Item 6 (page 96) and unclip cover ⇒ Item 5 (page 96) upwards.
- – Unscrew belt guide ⇒ Item 3 (page 96) .
- – Unclip trim from B-pillar, beginning on door side.
- ❑ Installing:
- – Check seating and condition of clips ⇒ Item 1 (page 96) and correct if necessary.
- – Check function of belt height adjustment.

3 - Belt anchor

4 - Hexagon head bolt

- ❑ $^{7}/_{16}$ x 20
- ❑ 40 Nm

5 - Cover

6 - Locking lug

7 - Seal

- ❑ After installing trims, ensure seal is seated correctly.

8 - Lower trim

- ❑ Removing:
- – Loosen sill trim strip and lower C-pillar trim in area of B-pillar.
- – Unclip trim from B-pillar, noting guide pin ⇒ Item 9 (page 96) .

9 - Guide pin

Copyright by Volkswagen AG. Volkswagen AG does not guarantee or accept any liability with respect to the correctness of information in this document. Copying, in whole, in part or in any other form without the prior written consent of Volkswagen AG is prohibited.
satelettronica

3.4 Removing and installing B-pillar trim 10.99 ▸

3.4.1 Two-door Polo

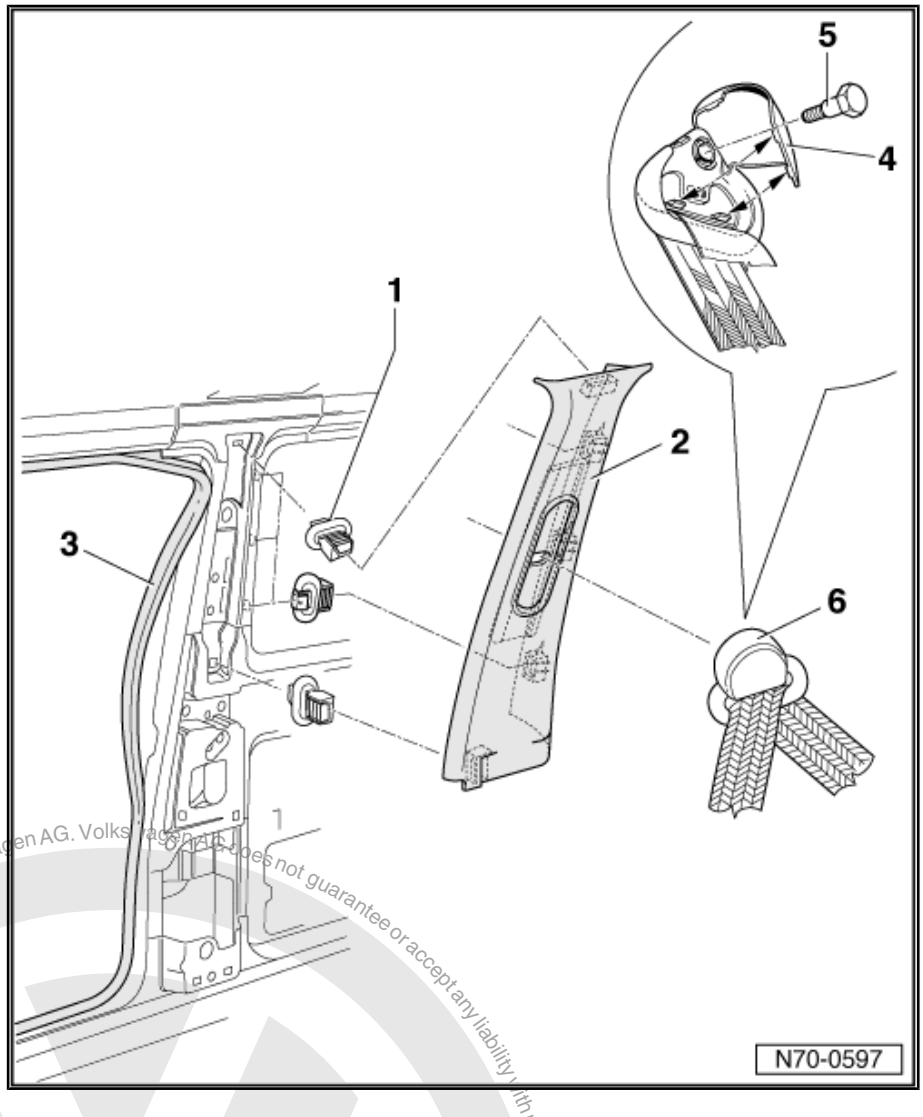

1 - Clip

- ❑ Qty. 5.
- ❑ Removing:
- – Turn clip 90° and pull out of B-pillar mounting.

2 - Trim panel

- ❑ Removing:
- – Loosen door seal ⇒ Item 3 (page 97) in area of B-pillar.
- – Release retaining lugs and swing cover ⇒ Item 4 (page 97) upwards.
- – Remove bolt ⇒ Item 5 (page 97) .
- – Remove guide fitting ⇒ Item 6 (page 97) .
- – Unclip trim from B-pillar, beginning on door side.
- ❑ Installing:
- – Check seating and condition of clips ⇒ Item 1 (page 97) and correct if necessary.
- – Check function of belt height adjustment.

3 - Door seal

- ❑ After installing trims, ensure seal is seated correctly.

4 - Cover

5 - Hexagon head bolt

- ❑ $^{7}/_{16}$ x 20
- ❑ 40 Nm

6 - Belt anchor

satelettronica
Protected by copyright. Copying for private or commercial purposes, in part or in whole, is not permitted unless authorised by Volkswagen AG. Volkswagen AG does not guarantee or accept any liability with respect to the correctness of information in this document. Copyright by Volkswagen AG.

3.4.2 Four-door Polo

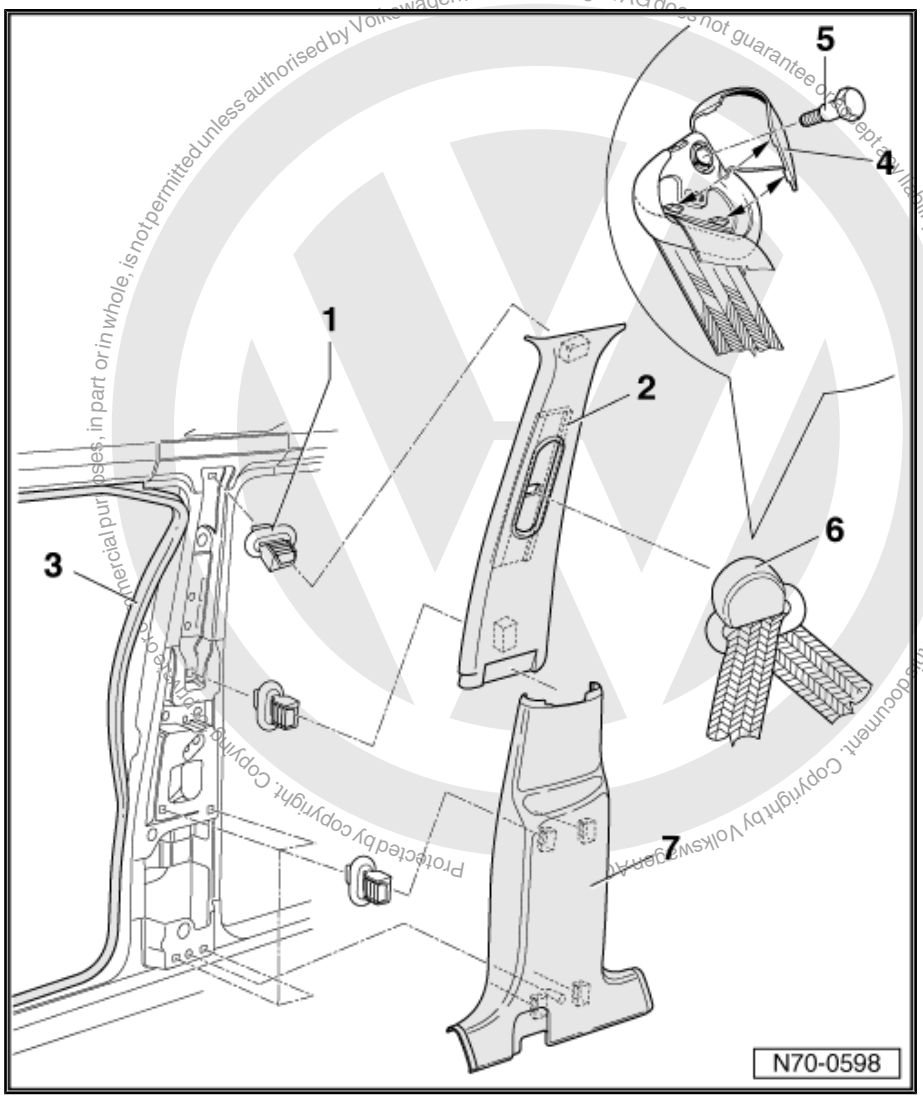

1 - Clip

- ❑ Qty. 6
- ❑ Removing:
- – Turn clip 90° and pull out of B-pillar mounting.

2 - Upper trim

- ❑ Removing:
- – Remove lower trim.
- – Loosen door seal ⇒ Item 3 (page 98) in area of B-pillar.
- – Release retaining lugs and swing cover ⇒ Item 4 (page 98) upwards.
- – Remove bolt ⇒ Item 5 (page 98) .
- – Remove guide fitting ⇒ Item 6 (page 98) .
- – Unclip trim from B-pillar, beginning on door side.
- ❑ Installing:
- – Check seating and condition of clips ⇒ Item 1 (page 98) and correct if necessary.
- – Check function of belt height adjustment.

3 - Door seal

- ❑ After installing trims, ensure seal is seated correctly.

4 - Cover

5 - Hexagon head bolt

- ❑ $^{7}/_{16}$ x 20
- ❑ 40 Nm

6 - Belt anchor

7 - Lower trim

- ❑ Removing:
- – Loosen sill trim strip and lower C-pillar trim in area of B-pillar.
- – Unclip trim from B-pillar.

satelettronica

3.5 Removing and installing upper C-pillar trim ▸ 09.99

3.5.1 Two-door Polo

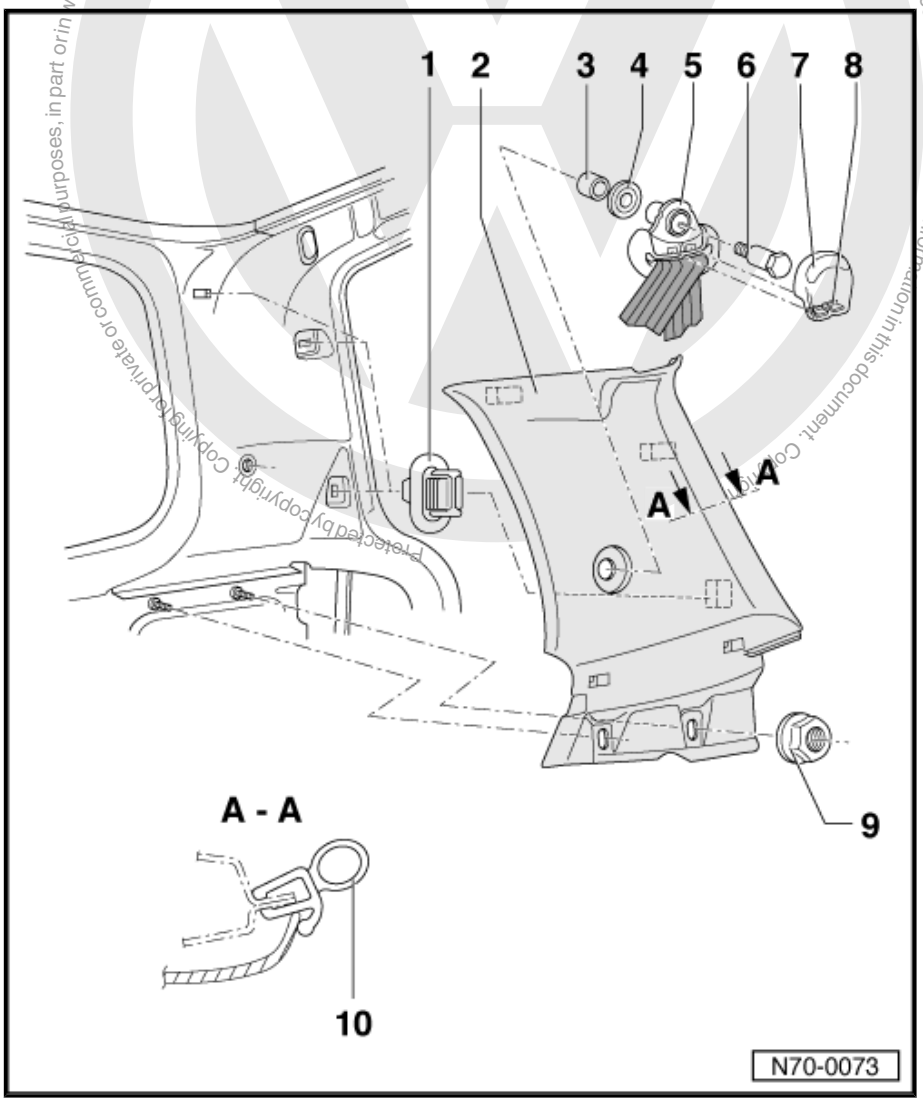

1 - Clip

- ❑ Qty. 3
- ❑ Removing:
- – Turn clip 90° and pull out of C-pillar mounting.

2 - Trim panel

- ❑ Removing:
- – Remove support for luggage compartment cover ⇒ page 108 .
- – Release retaining lugs ⇒ Item 8 (page 99) and unclip cover ⇒ Item 7 (page 99) upwards.
- – Unscrew belt guide ⇒ Item 5 (page 99) .
- – Unscrew spring clips ⇒ Item 9 (page 99) .
- – Unclip trim from C-pillar.
- ❑ Installing:
- – Check seating and condition of clips ⇒ Item 1 (page 99) and correct if necessary.

3 - Spacer sleeve

4 - Spring washer

5 - Belt anchor

6 - Hexagon head bolt

- ❑ $^{7}/_{16}$ x 20
- ❑ 40 Nm

7 - Cover

8 - Locking lug

9 - Spring clip

10 - Seal

- ❑ After installing trims, ensure seal is seated correctly.

Protected by copyright. Copying for private or commercial purposes, in part or in whole, is not permitted unless authorised by Volkswagen AG. Volkswagen AG does not guarantee or accept any liability with respect to the correctness of information in this document. Copyright by Volkswagen AG.
satelettronica

3.5.2 Four-door Polo

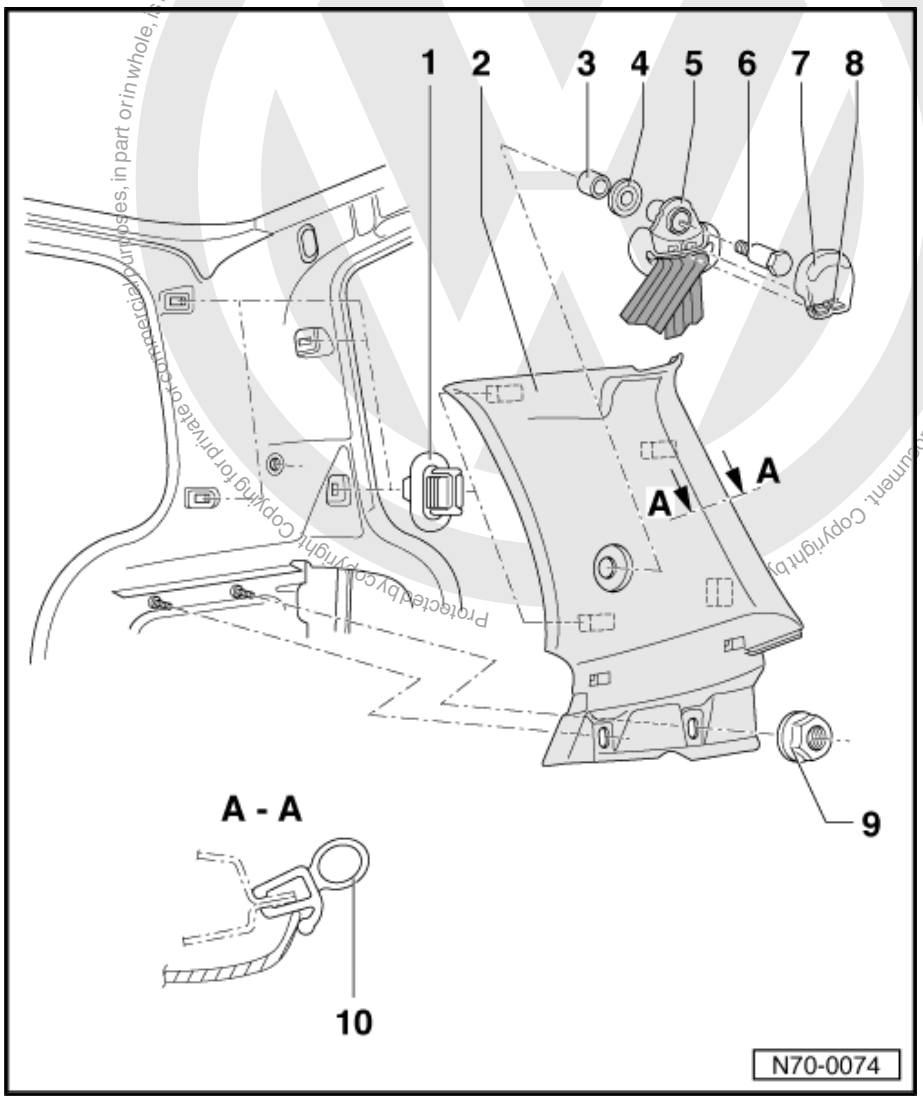

1 - Clip

- ❑ Qty. 4
- ❑ Removing:
- – Turn clip 90° and pull out of C-pillar mounting.

2 - Trim panel

- ❑ Removing:
- – Remove support for luggage compartment cover ⇒ page 108 .
- – Release retaining lugs ⇒ Item 8 (page 100) and unclip cover ⇒ Item 7 (page 100) upwards.
- – Unscrew belt guide ⇒ Item 5 (page 100) .
- – Unscrew spring clips ⇒ Item 9 (page 100) .
- – Unclip trim from C-pillar.
- ❑ Installing:
- – Check seating and condition of clips ⇒ Item 1 (page 100) and correct if necessary.

3 - Spacer sleeve

4 - Spring washer

5 - Belt anchor

6 - Hexagon head bolt

- ❑ $^{7}/_{16}$ x 20
- ❑ 40 Nm

7 - Cover

8 - Locking lug

9 - Spring clip

10 - Seal

- ❑ After installing trims, ensure seal is seated correctly.

Protected by copyright. Copying for private or commercial purposes, in part or in whole, is not permitted unless authorised by Volkswagen AG. Volkswagen AG does not guarantee or accept any liability with respect to the correctness of information in this document. Copyright by
satelettronica

3.6 Removing and installing upper C-pillar trim 10.99 ▸

3.6.1 Two-door Polo

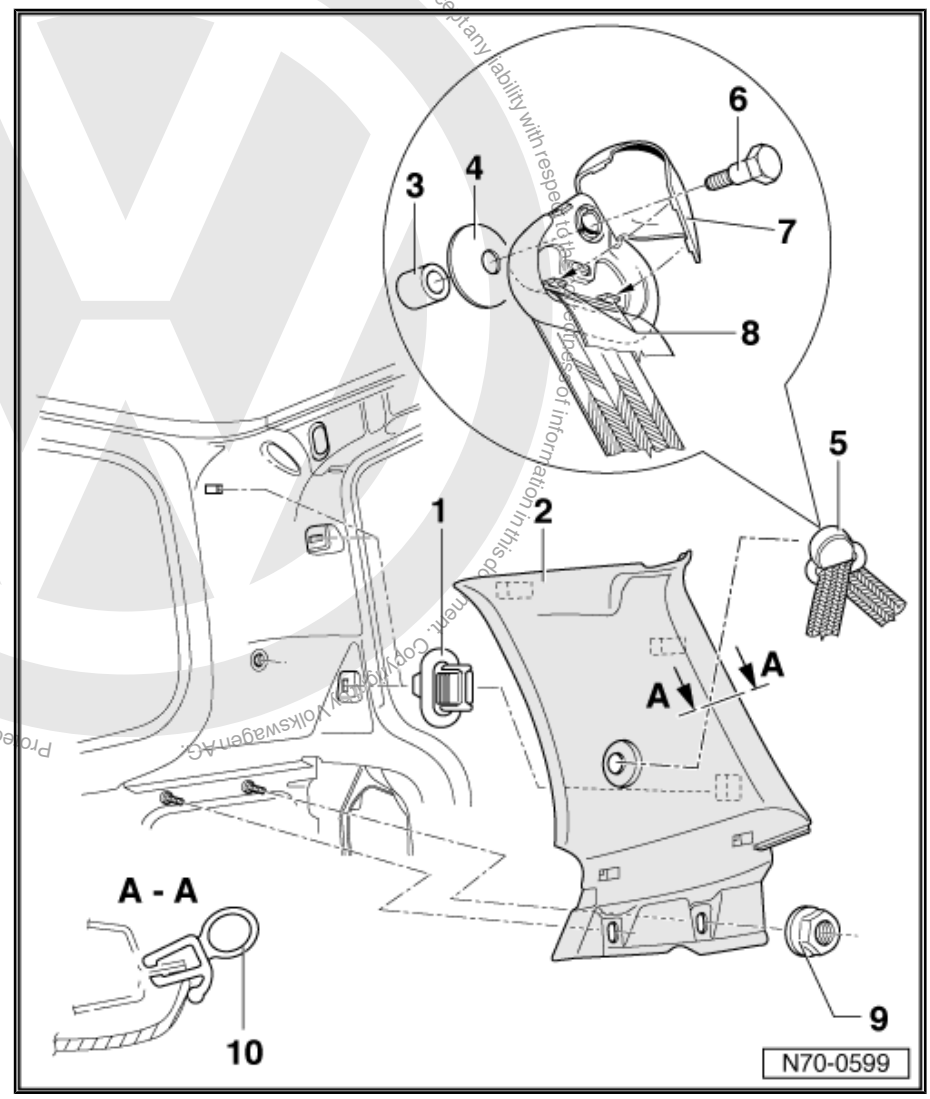

1 - Clip
- ❑ Qty. 3
- ❑ Removing:
- – Turn clip 90° and pull out of C-pillar mounting.

2 - Trim panel
- ❑ Removing:
- – Remove support for right luggage compartment cover ⇒ page 108 .
- – Remove support for left luggage compartment cover 10.99 ▸ ⇒ page 108 .
- – Release retaining lugs ⇒ Item 8 (page 101) and unclip cover ⇒ Item 7 (page 101) upwards.
- – Unscrew belt guide ⇒ Item 5 (page 101) .
- – Unscrew spring clips ⇒ Item 9 (page 101) .
- – Unclip trim from C-pillar.
- ❑ Installing:
- – Check seating and condition of clips ⇒ Item 1 (page 101) and correct if necessary.

3 - Spacer sleeve

4 - Spring washer

5 - Belt anchor

6 - Hexagon head bolt
- ❑ $^{7}/_{16}$ x 20
- ❑ 40 Nm

7 - Cover

8 - Locking lug

9 - Spring clip

10 - Seal
- ❑ After installing trims, ensure seal is seated correctly.

Protected by copyright. Copyright by Volkswagen AG. Volkswagen AG does not guarantee or accept any liability with respect to the correctness of information in this document. Copyright by Volkswagen AG. Protected by copyright. Copyright by Volkswagen AG. Volkswagen AG does not guarantee or accept any liability with respect to the correctness of information in this document. Copyright by Volkswagen AG. Protected by copyright. Copyright by Volkswagen AG. Volkswagen AG does not guarantee or accept any liability with respect to the correctness of information in this document. Copyright by Volkswagen AG. Protected by copyright. Copyright by Volkswagen AG. Volkswagen AG does not guarantee or accept any liability with respect to the correctness of information in this document. Copyright by Volkswagen AG. Protected by copyright. Copyright by Volkswagen AG. Volkswagen AG does not guarantee or accept any liability with respect to the correctness of information in this document. Copyright by Volkswagen AG.

satelettronica

3.6.2 Four-door Polo

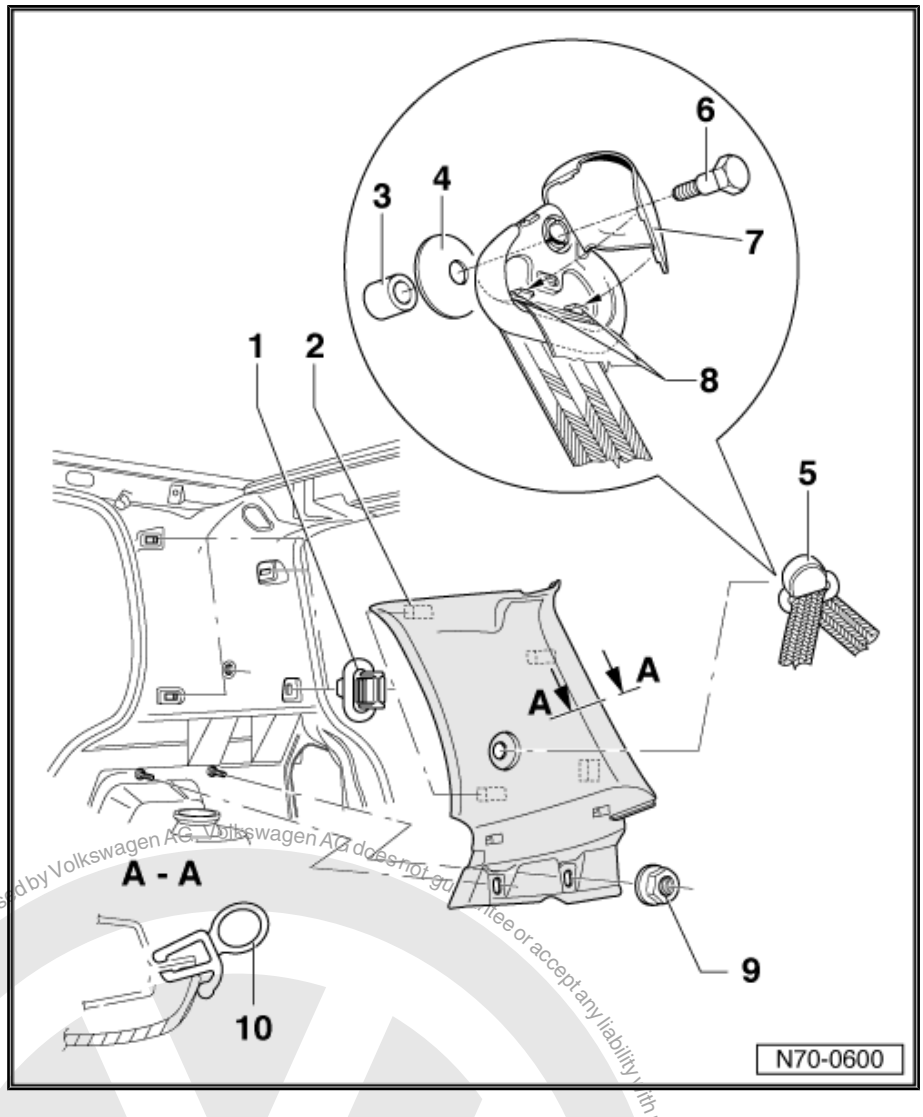

1 - Clip

- ❑ Qty. 4
- ❑ Removing:
- – Turn clip 90° and pull out of C-pillar mounting.

2 - Trim panel

- ❑ Removing:
- – Remove support for right luggage compartment cover ⇒ page 108 .
- – Remove support for left luggage compartment cover 10.99 ‣ ⇒ page 108 .
- – Release retaining lugs ⇒ Item 8 (page 102) and unclip cover ⇒ Item 7 (page 102) upwards.
- – Unscrew belt guide ⇒ Item 5 (page 102) .
- – Unscrew spring clips ⇒ Item 9 (page 102) .
- – Unclip trim from C-pillar.
- ❑ Installing:
- – Check seating and condition of clips ⇒ Item 1 (page 102) and correct if necessary.

3 - Spacer sleeve

4 - Spring washer

5 - Belt anchor

6 - Hexagon head bolt

- ❑ $^{7}/_{16}$ x 20
- ❑ 40 Nm

7 - Cover

8 - Locking lug

9 - Spring clip

10 - Seal

- ❑ After installing trims, ensure seal is seated correctly.

Protected by copyright. Copying for private or commercial purposes, in part or in whole, is not permitted unless authorised by Volkswagen AG. Volkswagen AG does not guarantee or accept any liability with respect to the correctness of information in this document. Copyright by Volkswagen AG.
satelettronica

3.7 Removing and installing lower C-pillar trim (4-door Polo) ▸ 09.99

1 - Trim panel

❑ Removing:

– Unscrew pin ⇒ Item 2 (page 103) and unscrew studs ⇒ Item 3 (page 103) .

– Pull trim out of clips ⇒ Item 5 (page 103) .

2 - Pin for backrest lock

❑ Removing:

– Release backrest and fold forwards.

– Unscrew pin with Allen wrench.

3 - Stud

❑ Removing:

– Release backrest and fold forwards or fold bench seat up.

– Unscrew stud from threaded pin.

❑ Installing:

– Press stud onto threaded pin.

4 - Seal

❑ After installing trims, ensure seal is seated correctly.

5 - Clip

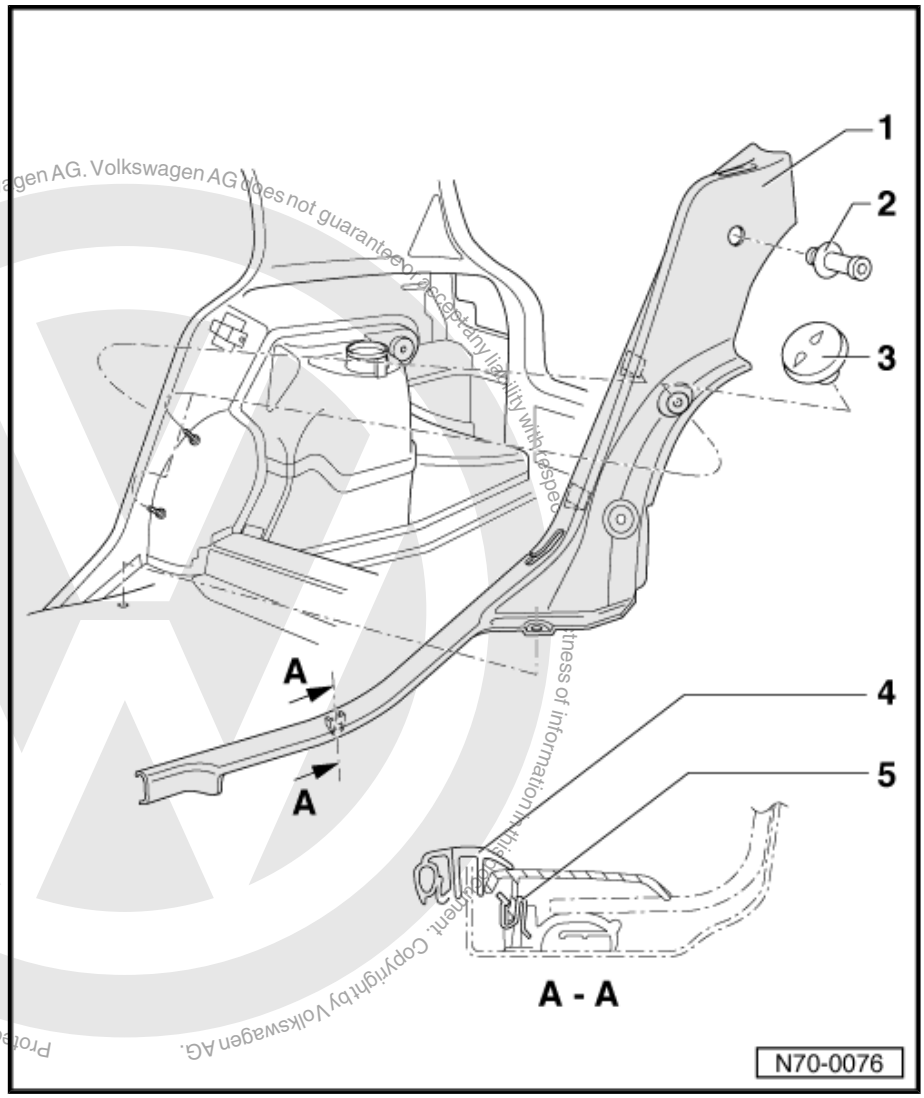

Protected by copyright. Copyright by Volkswagen AG. Volkswagen AG does not guarantee or accept any liability with respect to the correctness of information in this document. Copyright by Volkswagen AG.
satelettronica

3.8 Removing and installing lower C-pillar trim (4-door Polo) 10.99 ▸

1 - Trim panel

❑ Removing:

– Unscrew pin ⇒ Item 2 (page 104) and unscrew studs ⇒ Item 3 (page 104).

– Pull trim out of clips ⇒ Item 5 (page 104).

2 - Pin for backrest lock

❑ Removing:

– Release backrest and fold forwards.

– Unscrew pin with Allen wrench.

3 - Stud

❑ Removing:

– Release backrest and fold forwards or fold bench seat up.

– Unscrew stud from threaded pin.

❑ Installing:

– Press stud onto threaded pin.

4 - Seal

❑ After installing trims, ensure seal is seated correctly.

5 - Clip

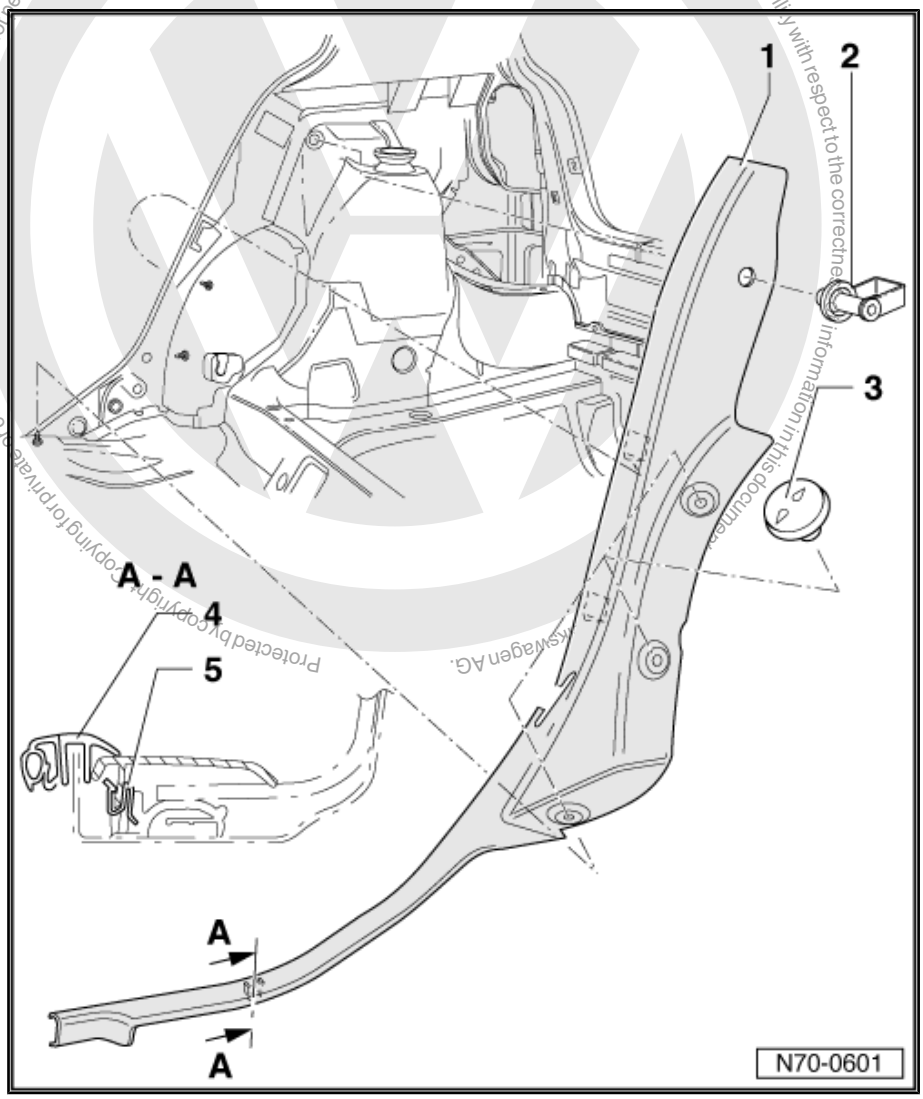

Protected by copyright. Copying for private or commercial purposes, in part or in whole, is not permitted unless authorised by Volkswagen AG. Volkswagen AG does not guarantee or accept any liability with respect to the correctness of information in this document.
Protected by copyright. Copying for private or commercial purposes, in part or in whole, is not permitted unless authorised by Volkswagen AG.
satelettronica

3.9 Removing and installing side trim (2-door Polo) ▸ 09.99

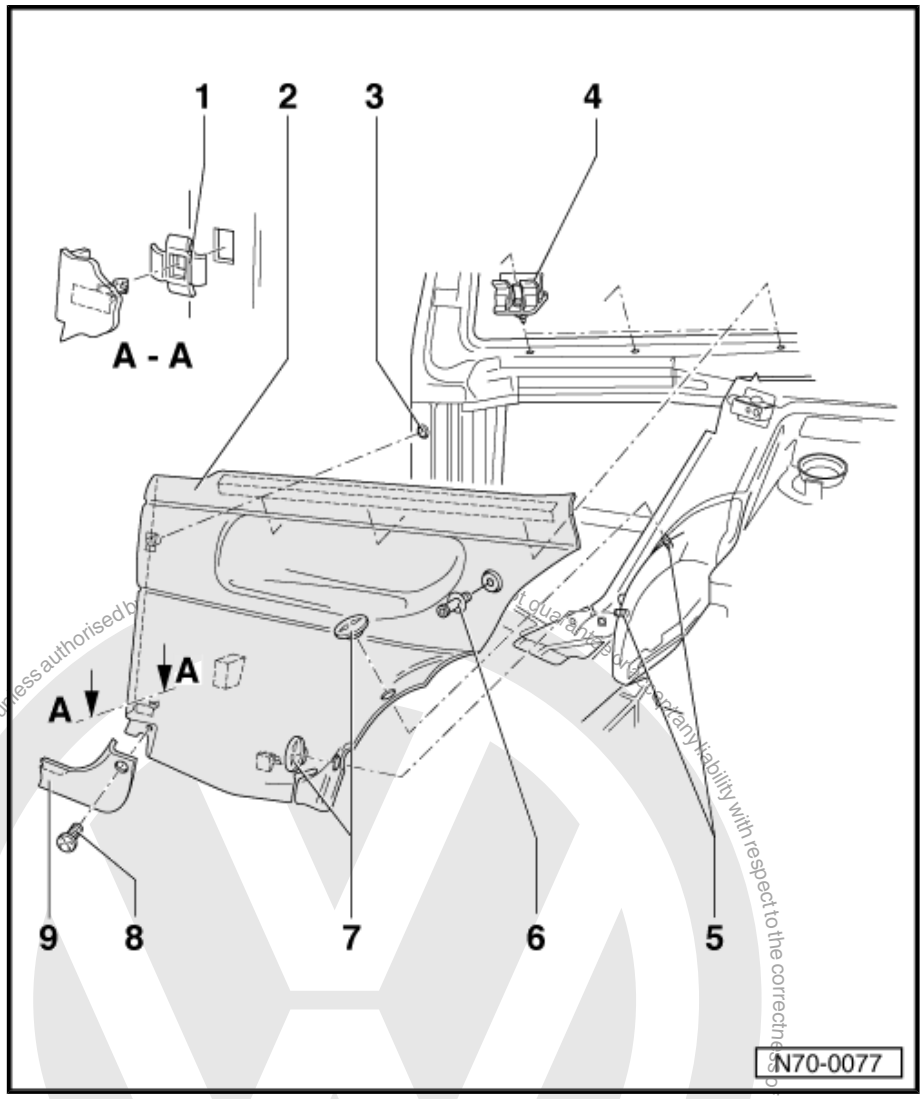

1 - Mounting clip

2 - Trim panel

❑ Removing:

– Remove cross-head screw ⇒ Item 8 (page 105) .

– Loosen sill trim strip ⇒ Item 9 (page 105) in rear area.

– Release backrest and fold forwards.

– Unscrew pin ⇒ Item 6 (page 105) and unscrew studs ⇒ Item 7 (page 105) .

– Unclip trim from B-pillar.

– Pull trim out of clips ⇒ Item 4 (page 105) and remove from side panel.

3 - Mounting clip

4 - Clip

❑ Qty. 3

5 - Stud

❑ Welded on.

6 - Pin for backrest lock

7 - Stud

❑ Unscrew or press on.

8 - Cross-head screw

❑ 1.2 Nm

9 - Sill panel trim

3.10 Removing and installing side trim (2-door Polo) 10.99 ▸

3.10.1 Removing

– Remove bench seat and backrest ⇒ page 142 .

– Remove bolt -1-.

– Unscrew studs -2-.

– Unscrew pin for backrest lock -3-.

– Loosen side trim in area of side panel clips.

Protected by copyright. Copyright by Volkswagen AG. Copying for private or commercial purposes, in part or in whole, is not permitted unless authorised by Volkswagen AG. Volkswagen AG does not guarantee or assume any liability with respect to the correctness of information in this document.
satelettronica

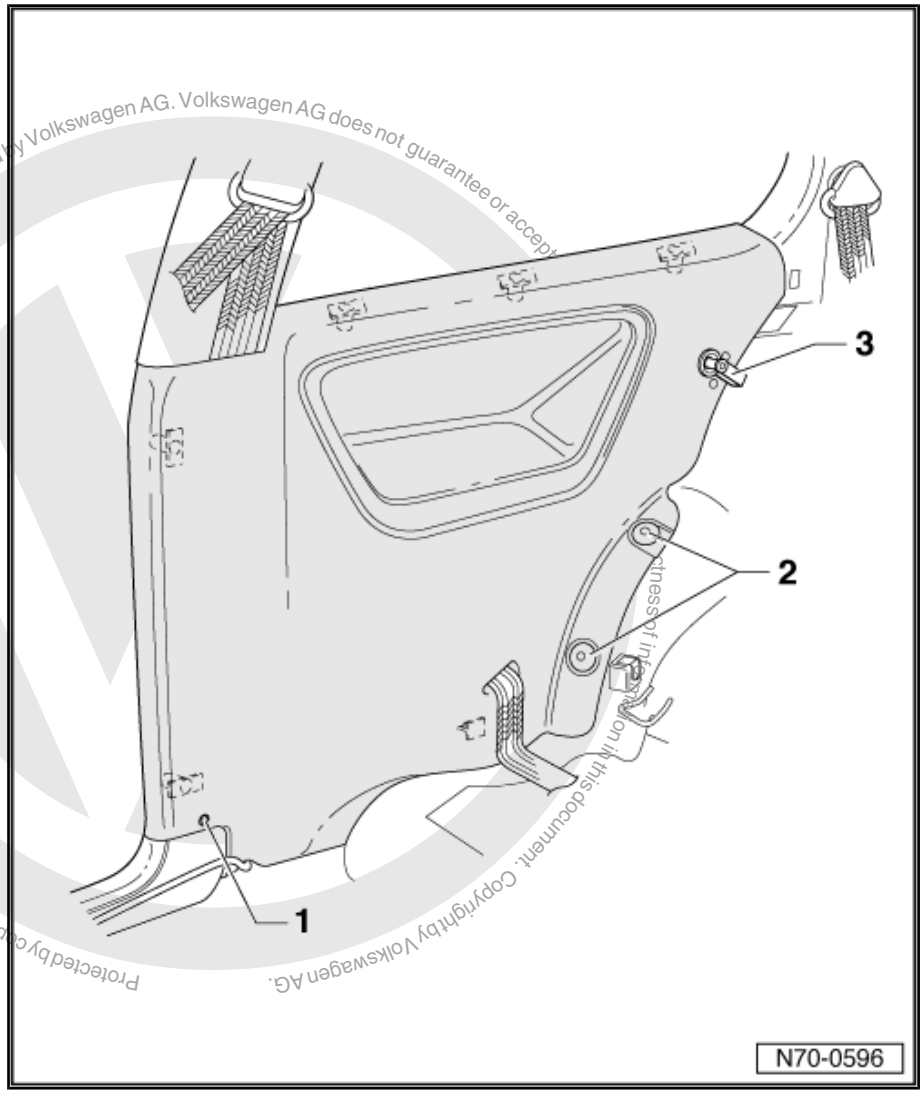

Protected by copyright. Copying for private or commercial purposes, in part or in whole, is not permitted unless authorised by Volkswagen AG. Volkswagen AG does not guarantee or accept any liability with respect to the correctness of information in this document. Copyright by Volkswagen AG.

3.10.2 Installing

– Installation is carried out in the reverse order.

satelettronica

Note

Before installing trim, check clip connections and renew as necessary.

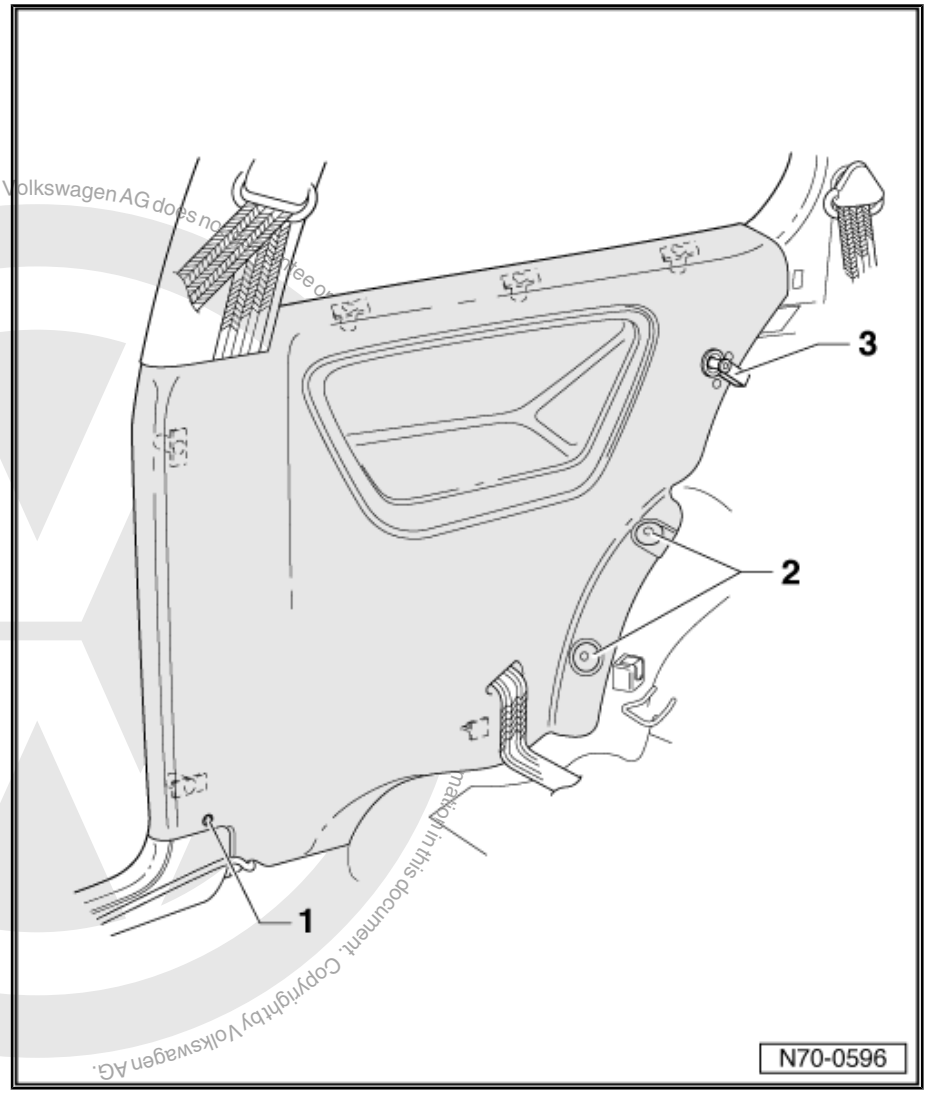

Protected by copyright. Copying for private or commercial purposes, in part or in whole, is not permitted unless authorised by Volkswagen AG. Volkswagen AG does not guarantee or assume any liability with respect to the correctness of information in this document. Copyright by Volkswagen AG.
satelettronica

3.11 Removing and installing support for right luggage compartment cover

1 - Support

❑ Removing:

– Take out luggage compartment cover.

– Remove Torx bolts ⇒ Item 4 (page 108) .

– Unclip support from C-pillar trim.

2 - Retaining pocket for two-door Polo

3 - Retaining pocket for four-door Polo

4 - Torx bolt -T20-

❑ 1.5 Nm

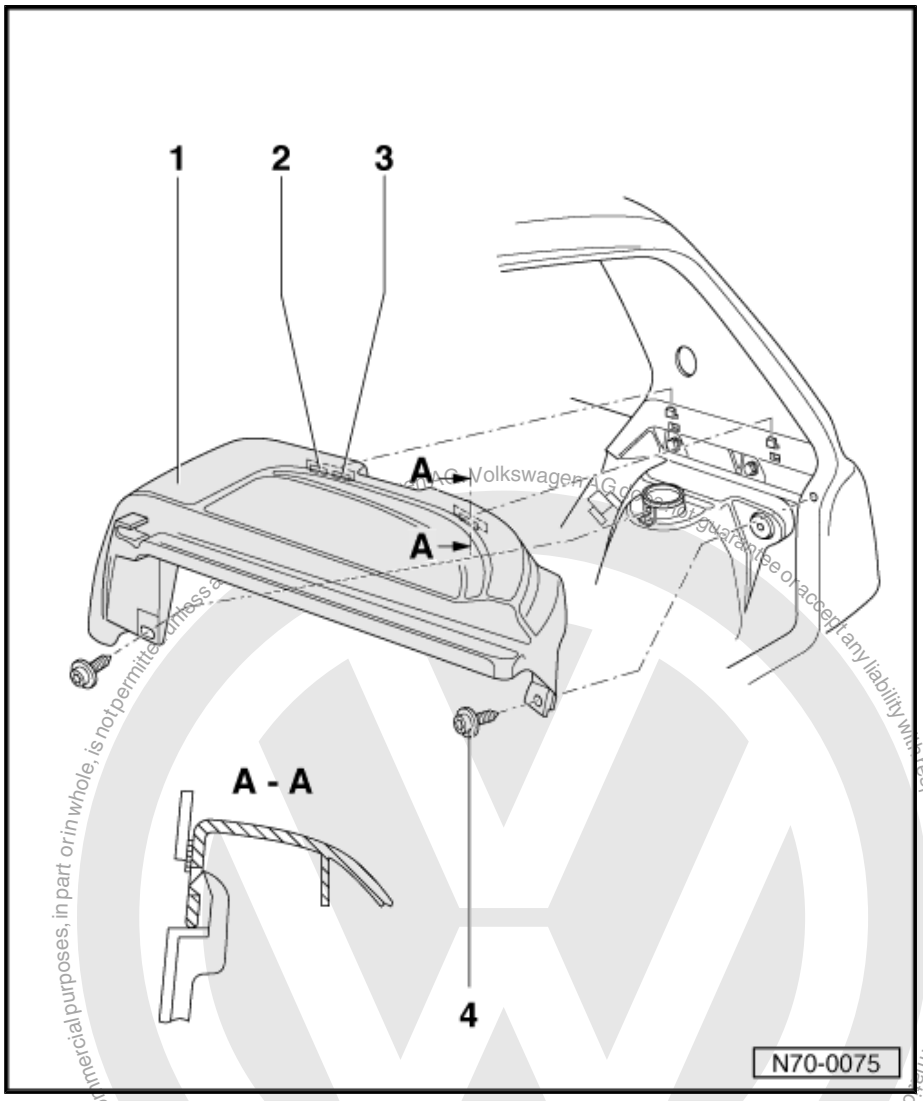

3.12 Removing and installing support for left luggage compartment cover 10.99 ▸

Note

- *Before disconnecting the battery see the note concerning the coding in the instruction manual for the radio.*
- *After reconnecting the battery, ensure vehicle equipment (radio, clock, electric windows) are checked as per Workshop manual/Owner's manual.*
- *The removal and installation procedures may have to be modified slightly depending on equipment variants.*

Protected by copyright. Copyright by Volkswagen AG.
Copyright by Volkswagen AG, in whole or in part, is not permitted for commercial purposes, in part or in whole, is not permitted. Volkswagen AG does not guarantee or accept any liability with respect to the correctness of information in this document.
satelettronica

3.12.1 Removing

WARNING

Disconnect battery earth strap before working on electrical system.

– Remove bolts -1- and -2- and remove support.
– Unclip luggage compartment illumination -3-.
– Disconnect connector -4- from socket -5-.

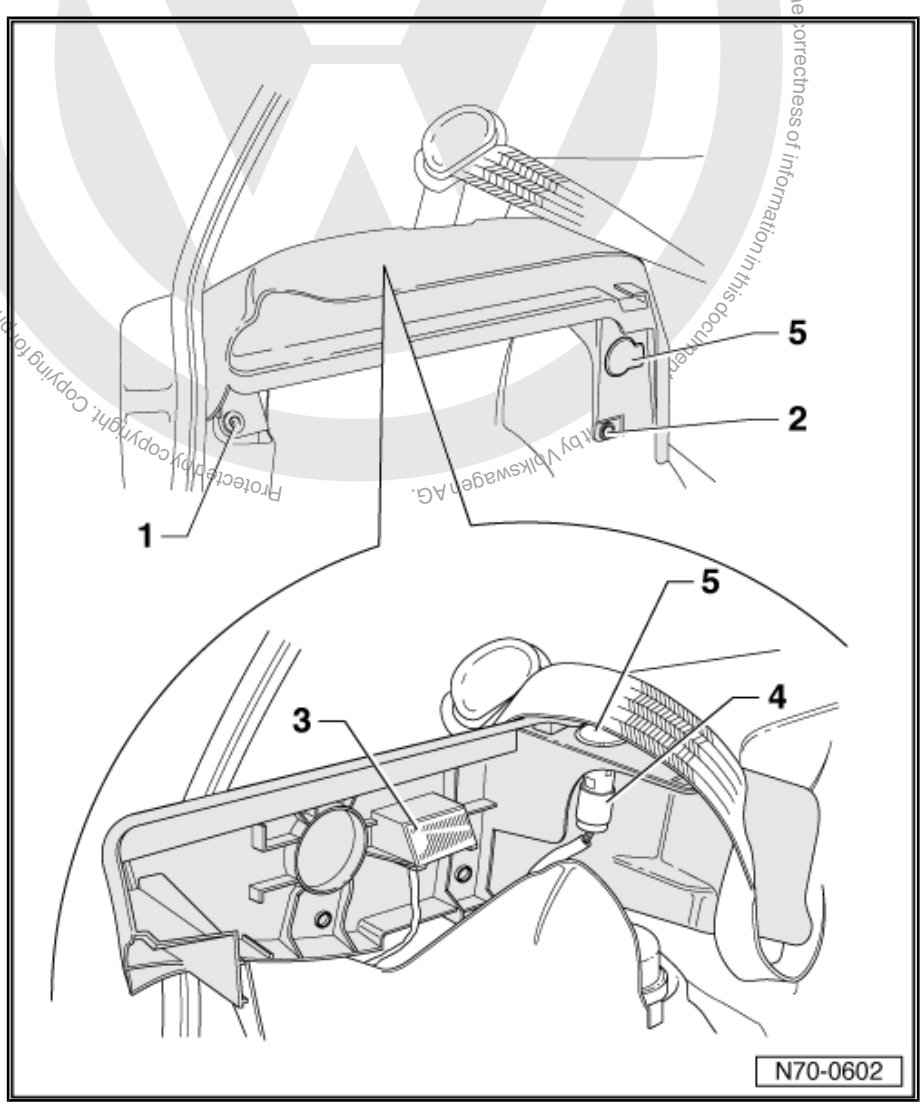

3.12.2 Installing

– Installation is carried out in reverse order of removal.

Protected by copyright. Copying for private or commercial purposes, in part or in whole, is not permitted unless authorised by Volkswagen AG. Volkswagen AG does not guarantee or accept any liability with respect to the correctness of information in this document.
satelettronica

3.13 Removing and installing luggage compartment floor trim

1 - Luggage compartment floor trim

- ❑ Removing:
- – Remove bench seat and backrest ⇒ page 142 .
- – Fold up rear seat bench, lever out plugs ⇒ Item 3 (page 110) and remove trim to rear.

2 - Sound insulation

- ❑ Bonded with molten adhesive.

3 - Plugs

- ❑ Lever out with release lever -80 - 200-

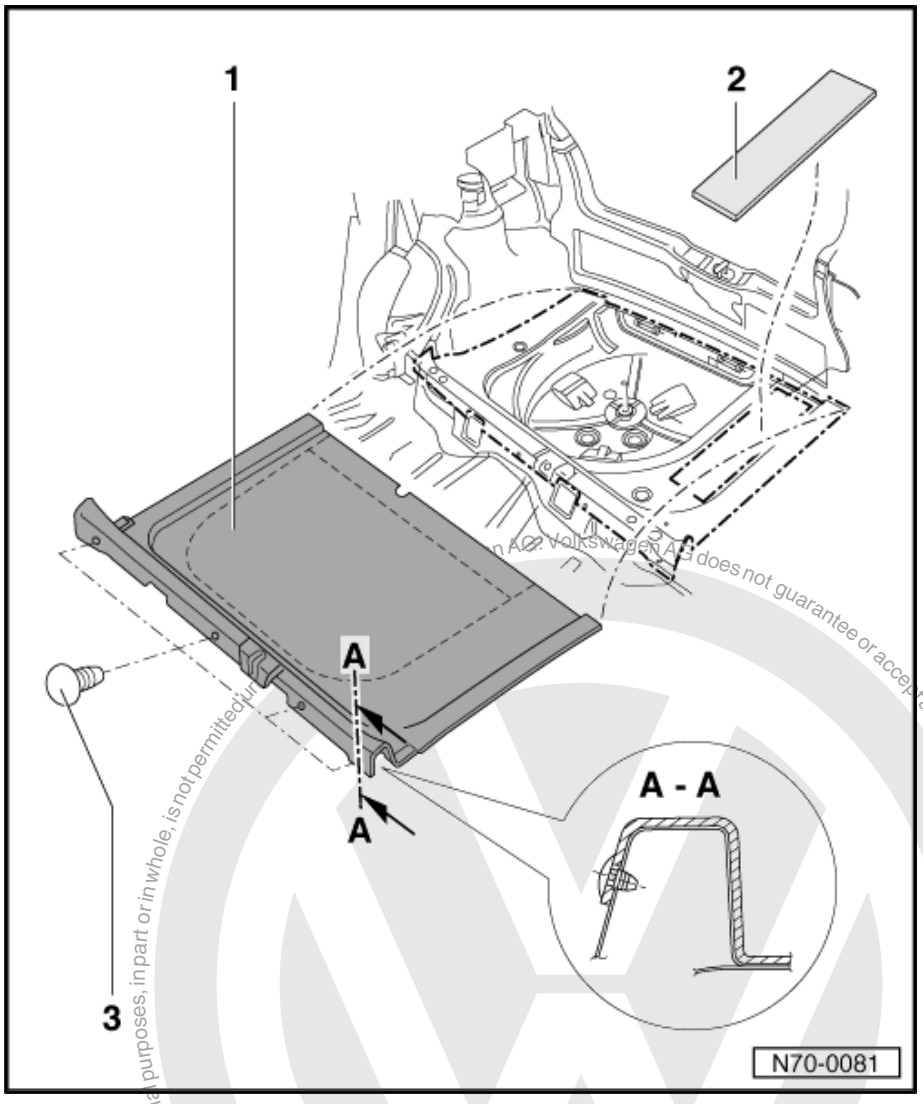

satelettronica
Protected by copyright. Copying for private or commercial purposes, in part or in whole, is not permitted unless authorised by Volkswagen AG. Volkswagen AG does not guarantee or accept any liability with respect to the correctness of information in this document. Copyright by Volkswagen AG.

3.14 Removing and installing left luggage compartment side trim ▸ 09.99

1 - Trim panel

❑ Removing:

– Removing lock carrier cover ⇒ page 115 .

– Loosen side trim (2-door Polo) in rear area.

– Loosen lower C-pillar trim (4-door Polo) in rear area.

– Lever off plugs ⇒ Item 2 (page 111) .

– Remove trim.

2 - Plugs

❑ Lever out with release lever -80 - 200-

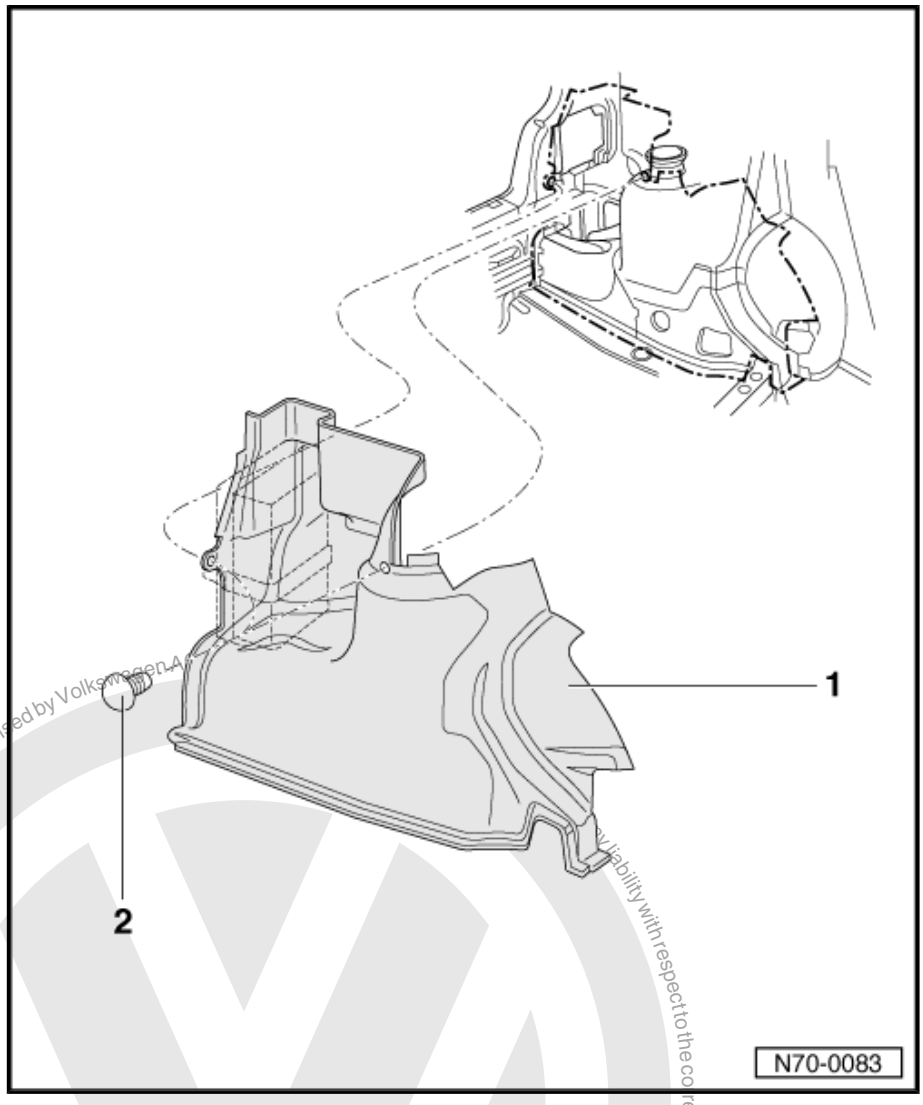

Protected by copyright. Copyright for private or commercial purposes, in part or in whole, is not permitted unless authorised by Volkswagen AG.
Copyright by Volkswagen AG. No liability with respect to the correctness of information in this document.
satelettronica

3.15 Removing and installing left luggage compartment side trim 10.99 ▸

1 - Plugs

❑ Lever out with release lever -80 - 200-

2 - Plugs

❑ Lever out with release lever -80 - 200-

3 - Trim panel

❑ Removing:

– Removing rear lock carrier cover 10.99 ▸ ⇒ page 116 .

– Loosen side trim (2-door Polo) in rear area.

– Loosen lower C-pillar trim (4-door Polo) in rear area.

– Lever off plugs ⇒ Item 1 (page 112) and ⇒ Item 2 (page 112) .

– Remove trim -3-.

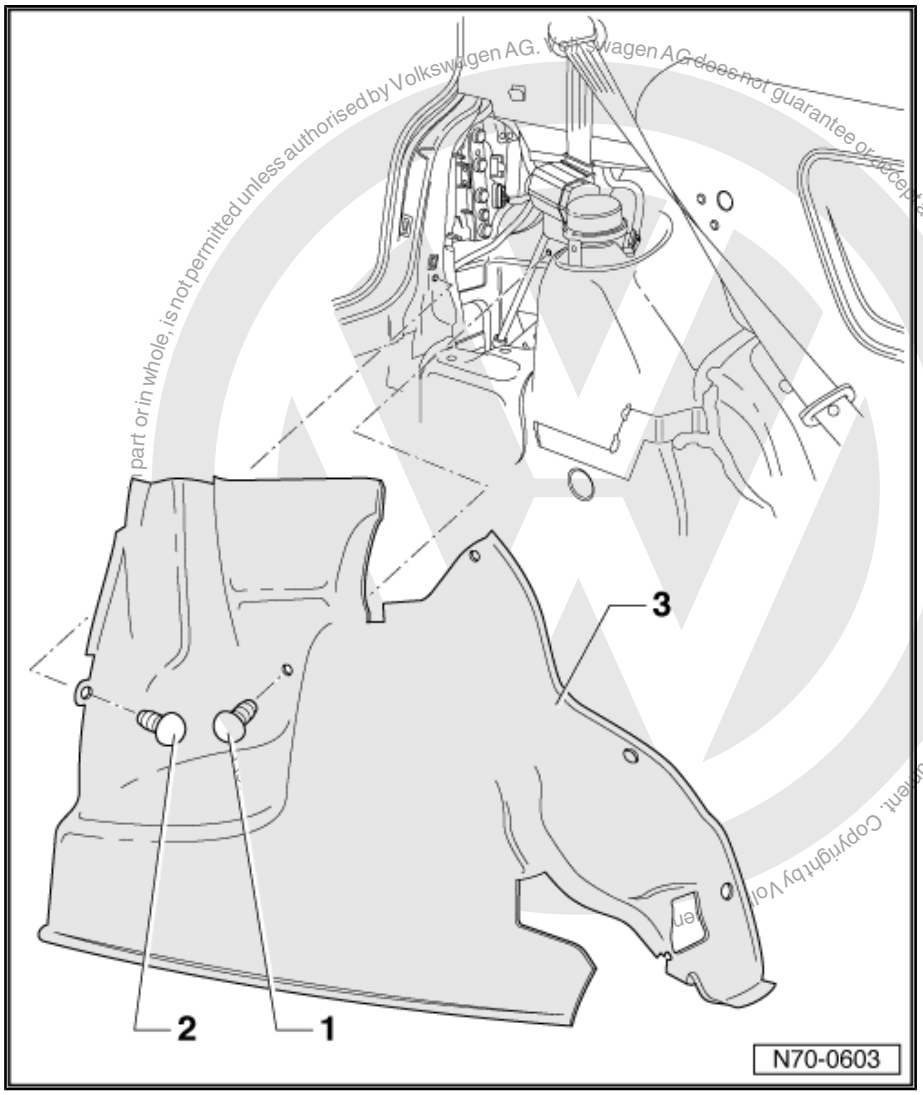

Copyright by Volkswagen AG. Volkswagen AG does not guarantee or accept any liability with respect to the correctness of information in this document. Copying in part or in whole, is not permitted unless authorised by Volkswagen AG.
satelettronica

3.16 Removing and installing right luggage compartment side trim ▸ 09.99

1 - Trim panel

❑ Removing:

– Removing lock carrier cover ⇒ page 115 .

– Loosen side trim (2-door Polo) in rear area.

– Loosen lower C-pillar trim (4-door Polo) in rear area.

– Lever out plugs ⇒ Item 2 (page 113) .

– Unscrew stud ⇒ Item 3 (page 113) .

– Remove trim.

2 - Plugs

❑ Lever out with release lever -80 - 200-

3 - Stud

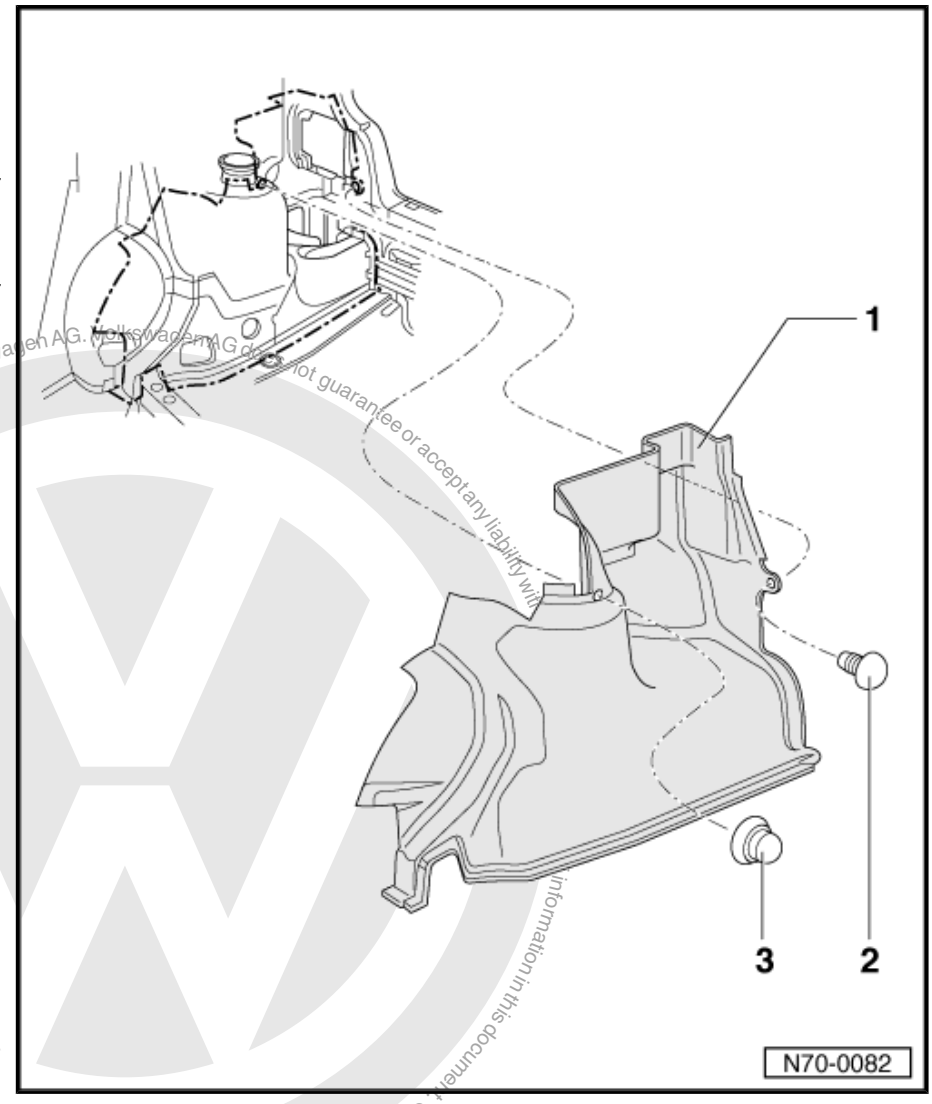

Protected by copyright. Copying for private or commercial purposes, in part or whole, is not permitted unless authorised by Volkswagen AG. Volkswagen AG does not guarantee or accept any liability with respect to the correctness of information in this document. Copyright by Volkswagen AG.
satelettronica

3.17 Removing and installing right luggage compartment side trim 10.99 ▸

1 - Trim panel

❑ Removing:

– Removing rear lock carrier cover 10.99 ▸ ⇒ page 116 .

– Loosen side trim (2-door Polo) in rear area.

– Loosen lower C-pillar trim (4-door Polo) in rear area.

– Lever out plugs ⇒ Item 2 (page 114) .

– Remove trim.

2 - Plugs

❑ Lever out with release lever -80 - 200-

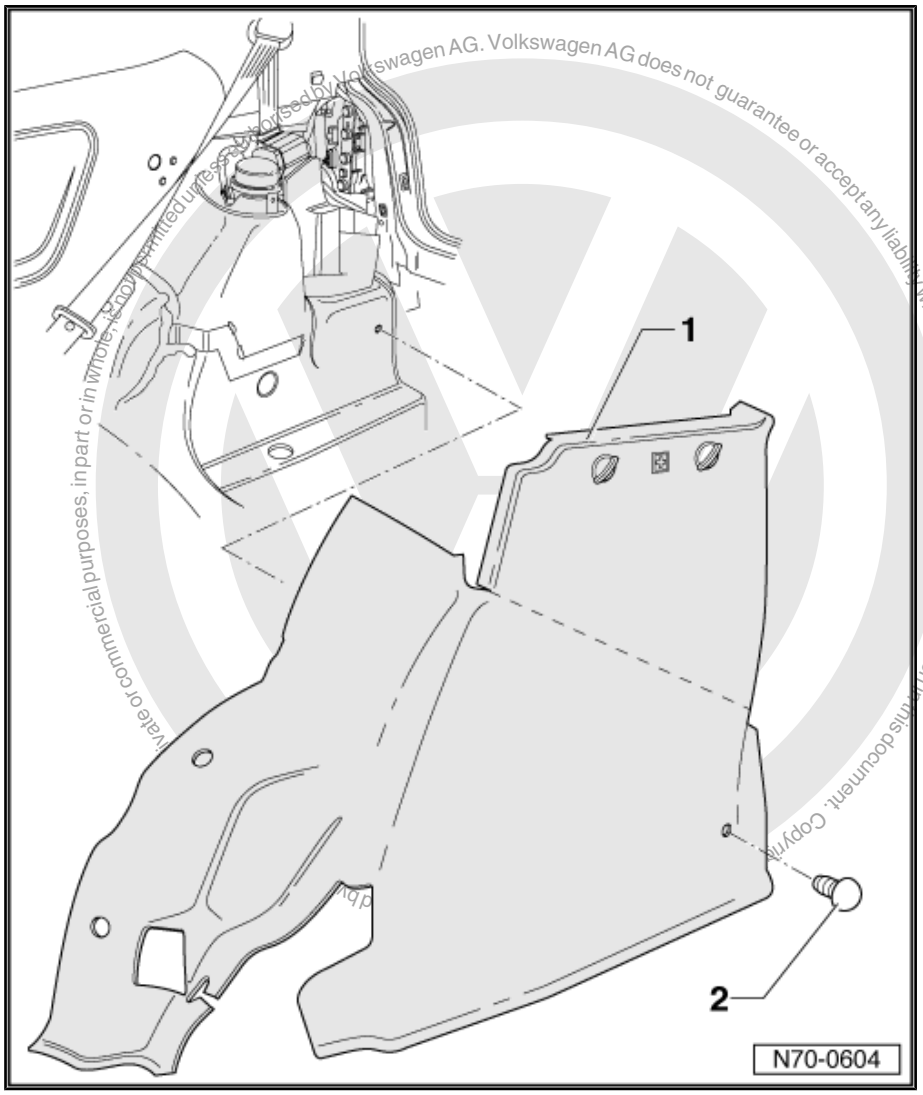

satelettronica

Protected by copyright. Copying for private or commercial purposes, in part or in whole, is not permitted unless authorised by Volkswagen AG. Volkswagen AG does not guarantee or accept any liability with respect to the correctness of information in this document.

3.18 Removing and installing rear lock carrier cover ▸ 09.99

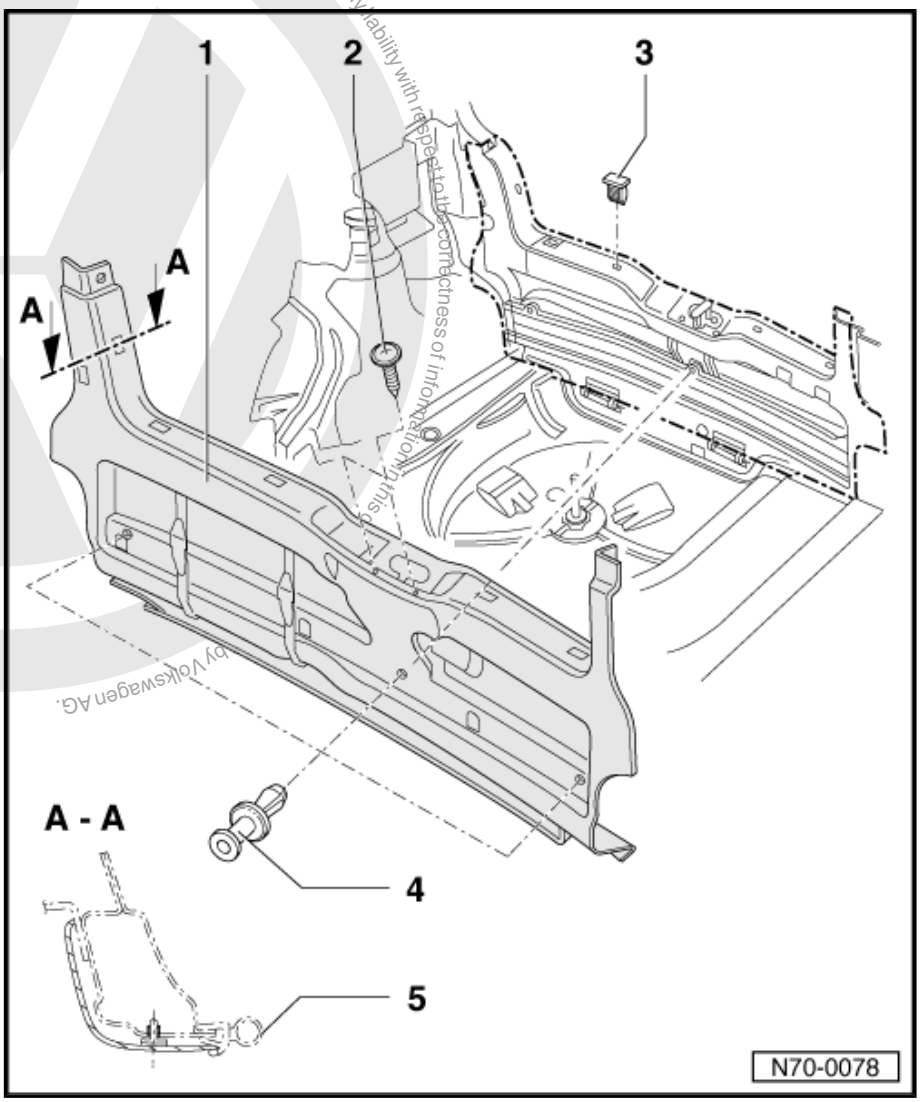

1 - Lock carrier cover

- ❑ Removing:
  - – Unhook luggage compartment cover.
  - – Fold backrest and luggage compartment floor trim forwards.
  - – Remove supports for luggage compartment cover ⇒ page 108 .
  - – Remove clips ⇒ Item 4 (page 115) .
  - – Remove cross-head screws ⇒ Item 2 (page 115) .
  - – Unclip cover ⇒ Item 1 (page 115) from lock carrier.

2 - Cross-head screw

- ❑ Qty. 2
- ❑ 1.2 Nm

3 - Clip

- ❑ Qty. 8
- ❑ Insert into cover mounting brackets prior to installation.

4 - Clip

- ❑ Two-piece.
- ❑ Removing: unscrew inner part with Allen wrench.
- ❑ Installing: press outer part and inner part in turn into mounting hole.

5 - Seal

- ❑ After installing cover, ensure seal is seated correctly.

satelettronica

3.19 Removing and installing rear lock carrier cover 10.99 ▸

1 - Lock carrier cover

- ❑ Removing:
- – Unhook luggage compartment cover.
- – Fold backrest and luggage compartment floor trim forwards.
- – Remove support for right luggage compartment cover ⇒ page 108
- – Remove support for left luggage compartment cover 10.99 ▸ ⇒ page 108
- – Unclip cover ⇒ Item 1 (page 116) from lock carrier.

2 - Clip

- ❑ Qty. 11
- ❑ Insert into cover mounting brackets prior to installation.

3 - Seal

- ❑ After installing cover, ensure seal is seated correctly.

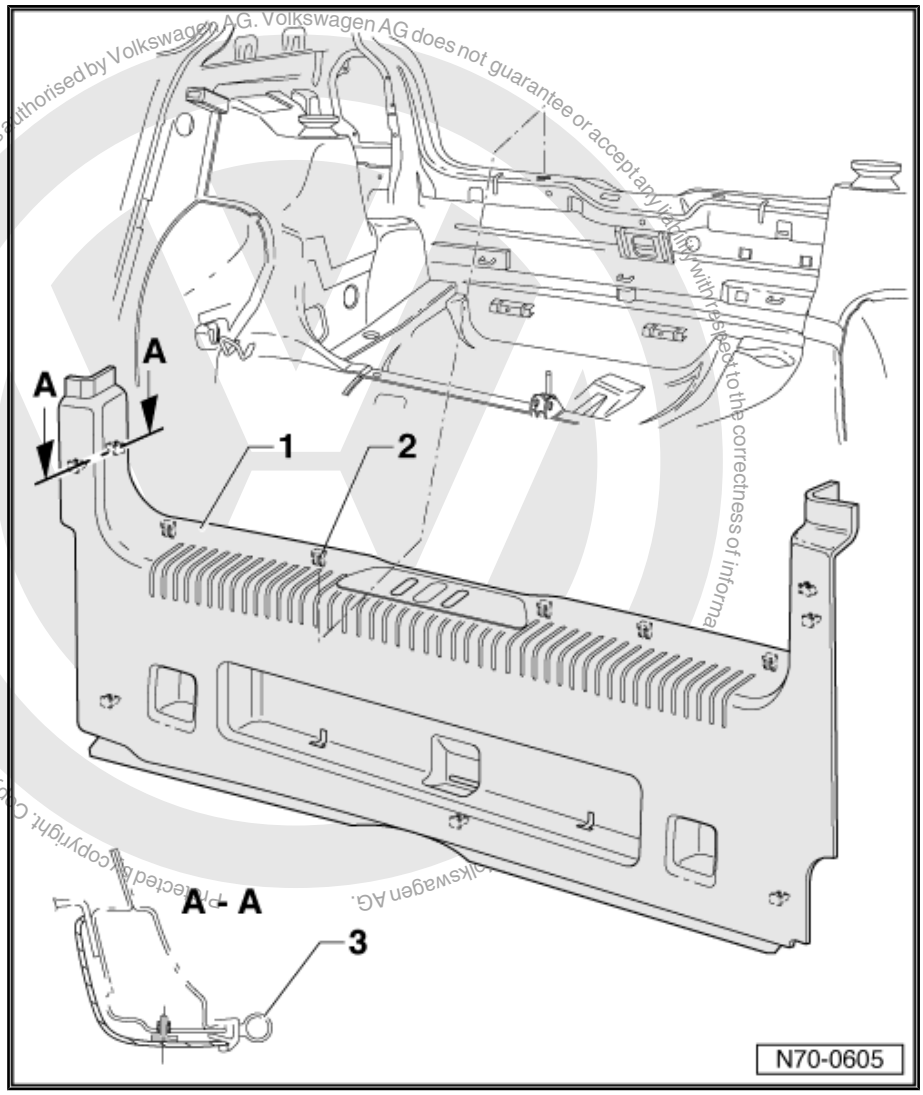

Volkswagen AG. Volkswagen AG does not guarantee or accept any liability with respect to the correctness of information
Copyright. Copyright protected by Volkswagen AG. Unauthorised use, in whole or in part, is not permitted unless authorised by Volkswagen AG. Volkswagen AG does not guarantee or accept any liability with respect to the correctness of information
satelettronica

3.20 Removing and installing rear lid trim ▸ 09.99

1 - Cross-head screw

- ❑ 1.2 Nm

2 - Spreader nut

3 - Trim panel

- ❑ Removing:
- – Remove cross-head screw
  ⇒ Item 1 (page 117) .
- – Starting from above un-clip trim.

4 - Spreader clip

- ❑ Qty. 8

5 - Clip

- ❑ Qty. 2
- ❑ Removing:
- – Turn clip 45° and pull out of mounting hole.

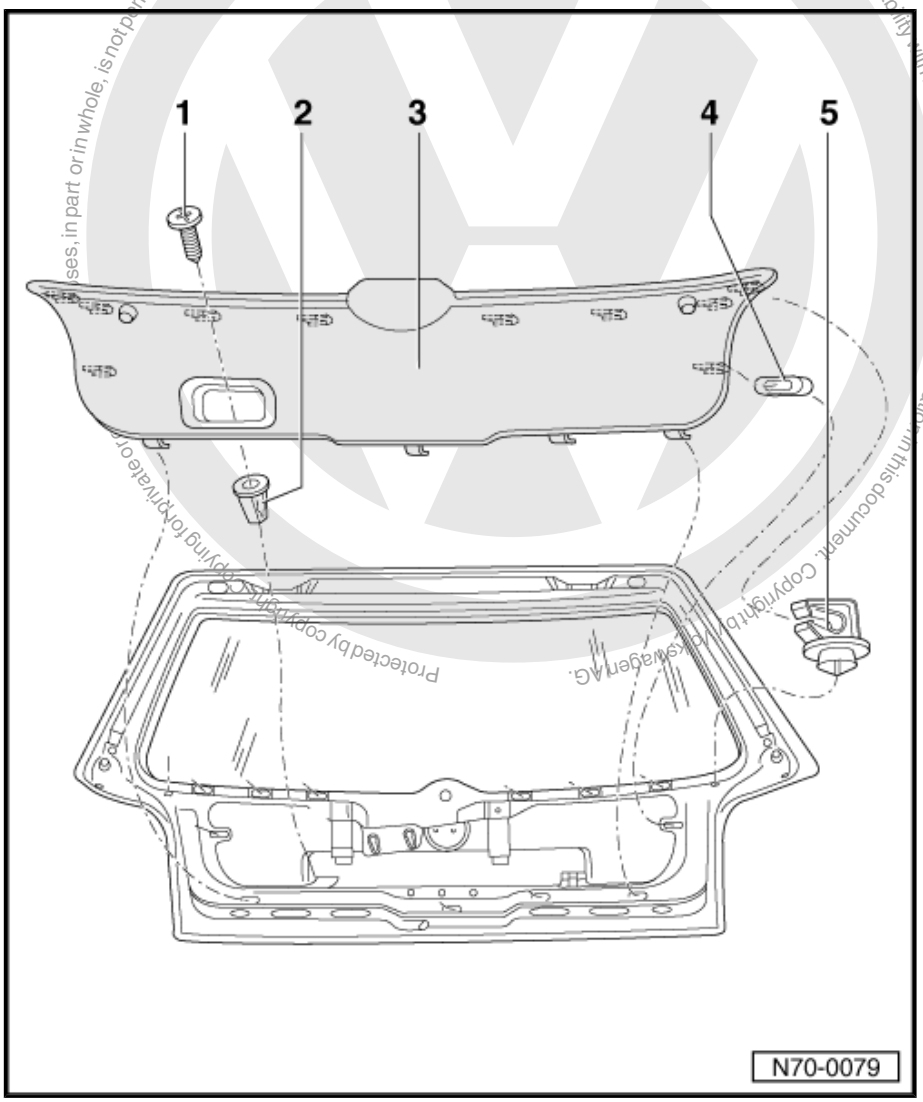

Protected by copyright. Copying for private or commercial purposes, in part or in whole, is not permitted unless authorised by Volkswagen AG. Volkswagen AG does not guarantee or accept any liability with respect to the correctness of information in this document. Copyright by Volkswagen AG.
satelettronica

3.21 Removing and installing rear lid trim 10.99 ▸

1 - Cross-head screws

- ❑ 1.2 Nm

2 - Spreader nuts

3 - Trim panel

- ❑ Removing:
- – Remove cross-head screws ⇒ Item 1 (page 118) .
- – Starting from above un-clip trim.

4 - Spreader clip

- ❑ Qty. 8

5 - Clip

- ❑ Qty. 2
- ❑ Removing:
- – Turn clip 45° and pull out of mounting hole.

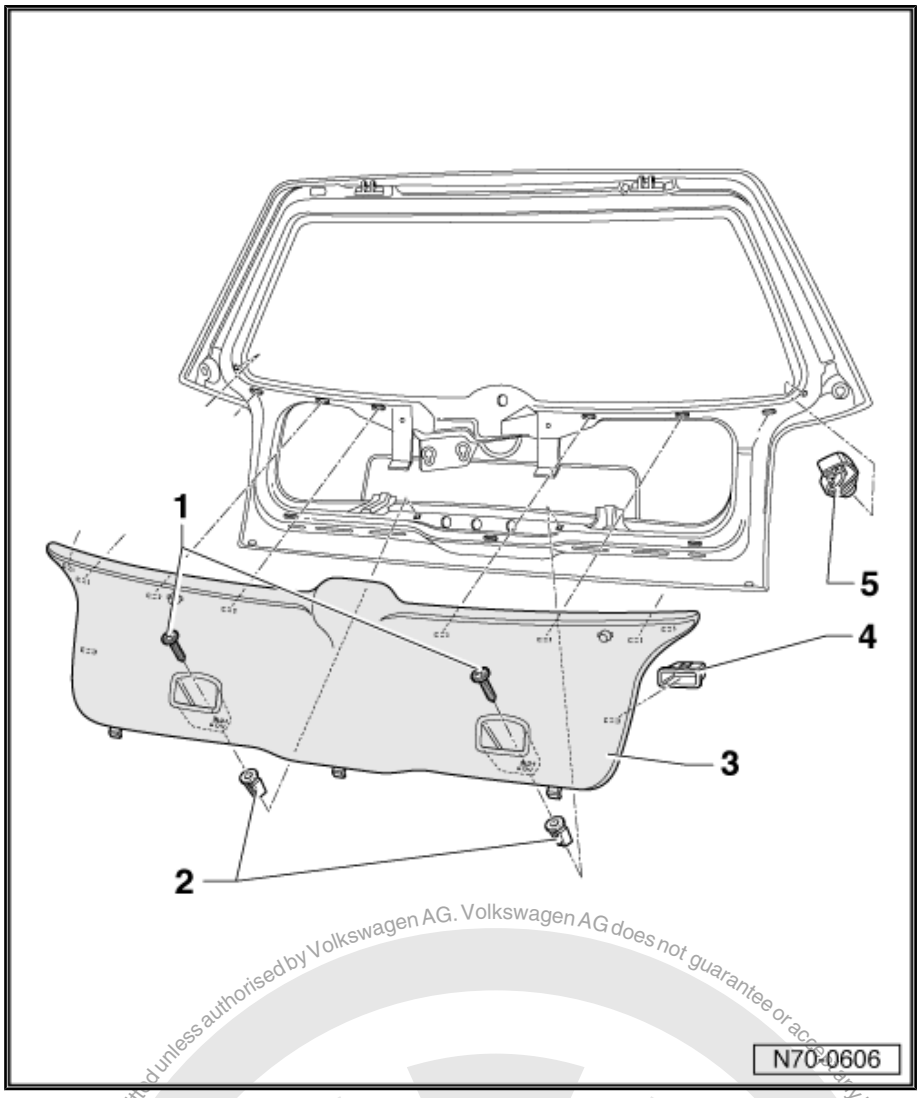

Protected by copyright. Copying for private or commercial purposes, in part or in whole, is not permitted unless authorised by Volkswagen AG. Volkswagen AG does not guarantee or accept any liability with respect to the correctness of information in this document. Copyright by Volkswagen AG.
satelettronica

4 Roof trims

4.1 Removing and installing moulded headlining ▸ 09.99

Note

- *Before disconnecting the battery see the note concerning the coding in the instruction manual for the radio.*
- *After reconnecting the battery, ensure vehicle equipment (radio, clock, electric windows) are checked as per Workshop manual/Owner's manual.*

4.1.1 Removing

WARNING

Disconnect battery earth strap before working on electrical system.

– Take out luggage compartment cover.

– Remove supports for luggage compartment cover ⇒ page 108 .

– Remove A-pillar trim ⇒ page 94 .

– Remove upper B-pillar trims ▸ 09.99 ⇒ page 95 and ⇒ page 96 .

– Remove upper C-pillar trims ▸ 09.99 ⇒ page 99 .

– Lever interior light out with a screwdriver and disconnect connectors.

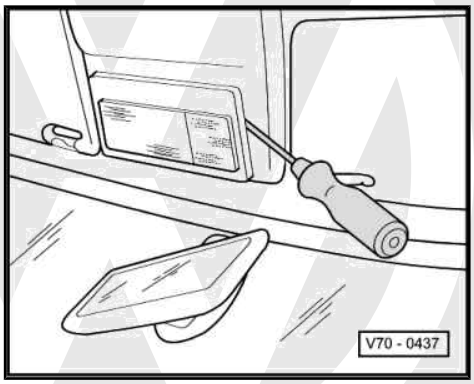

– Unscrew sun visors -1- and sun visor support -2- (turn sun visor support 90° to remove) and disconnect connections for mirror illumination.

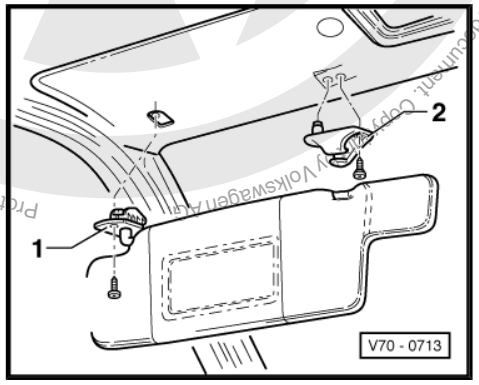

Protected by copyright. Copying for private or commercial purposes, in part or in whole, is not permitted unless authorised by Volkswagen AG. Volkswagen AG does not guarantee or accept any liability with respect to the correctness of information in this document. Copyright by Volkswagen AG
Satelettronica

– Fold grab handle -1- down.
– Lever covers -2- up using screwdriver and fold open.
– Unscrew cross-head screws -3- and take off handle-1-.

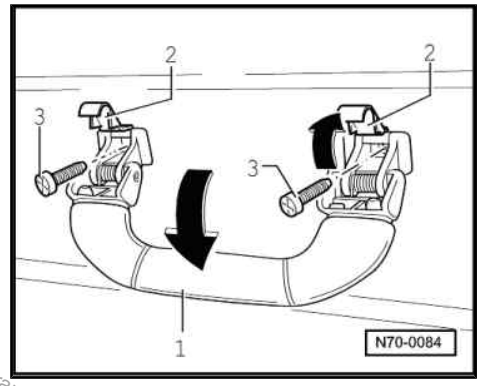

– Pull off end strip -5- (secured with clips) downwards from roof frame.
– Lower moulded headlining -2- with help of second mechanic (danger of breakage) and remove from vehicle.

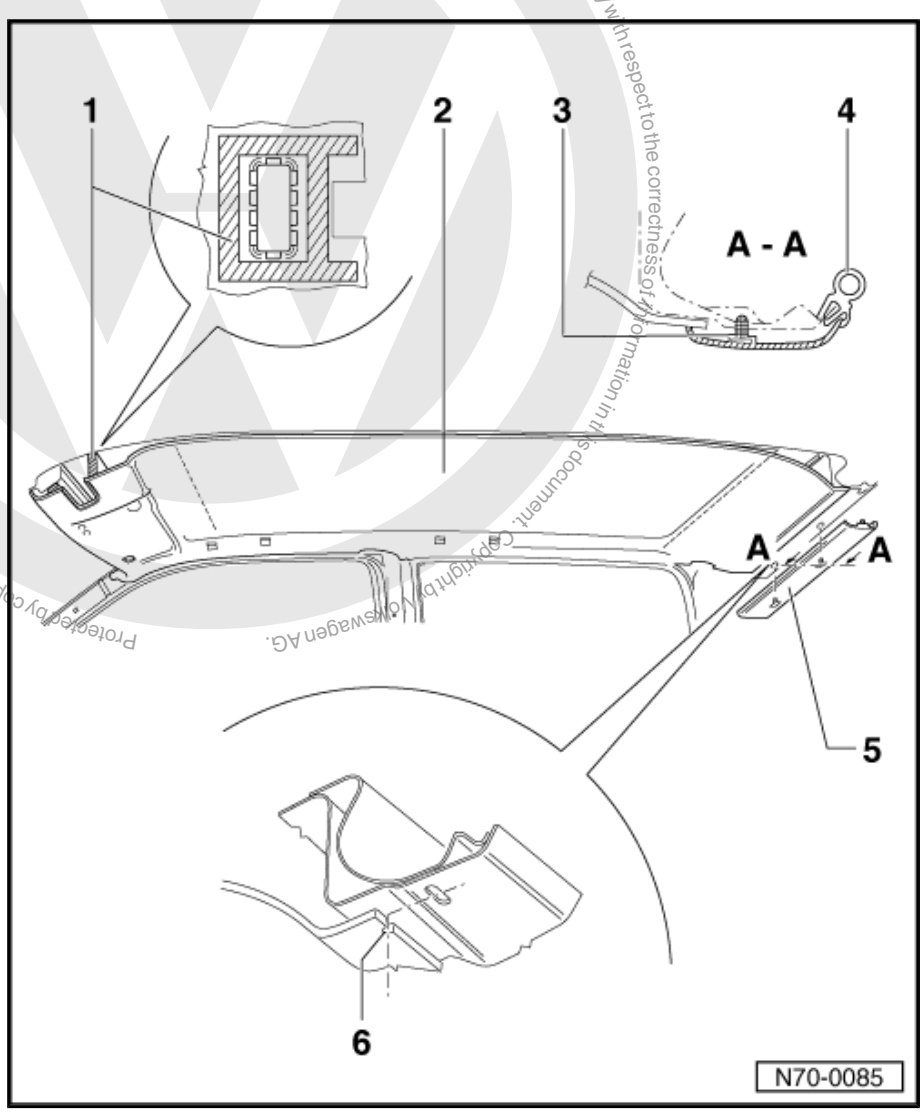

4.1.2 Installing

– Align moulded headlining -2- to sun visor supports at front and centre marking at rear -6-.

Protected by copyright. Copying for private or commercial purposes, in part or in whole, is not permitted unless authorised by Volkswagen AG. Volkswagen AG does not guarantee or accept any liability with respect to the correctness of information in this document. Copyright by Volkswagen AG.
satelettronica

Protected by copyright. Copying for private or commercial purposes, in part or in whole, is not permitted unless authorised by Volkswagen AG. Volkswagen AG does not guarantee or accept any liability with respect to the correctness of information in this document. Copyright by Volkswagen AG.

- Secure moulded headliner at front with sun visors.
- Insert clips -3- into end strip.
- Clip end strip -5- into roof frame.
- Attach bolt-on components.

Note

- *After installing end strip -5-, ensure seal -4- is seated correctly.*
- *Self-adhesive spacer -1- is bonded onto rear of moulded headlining.*

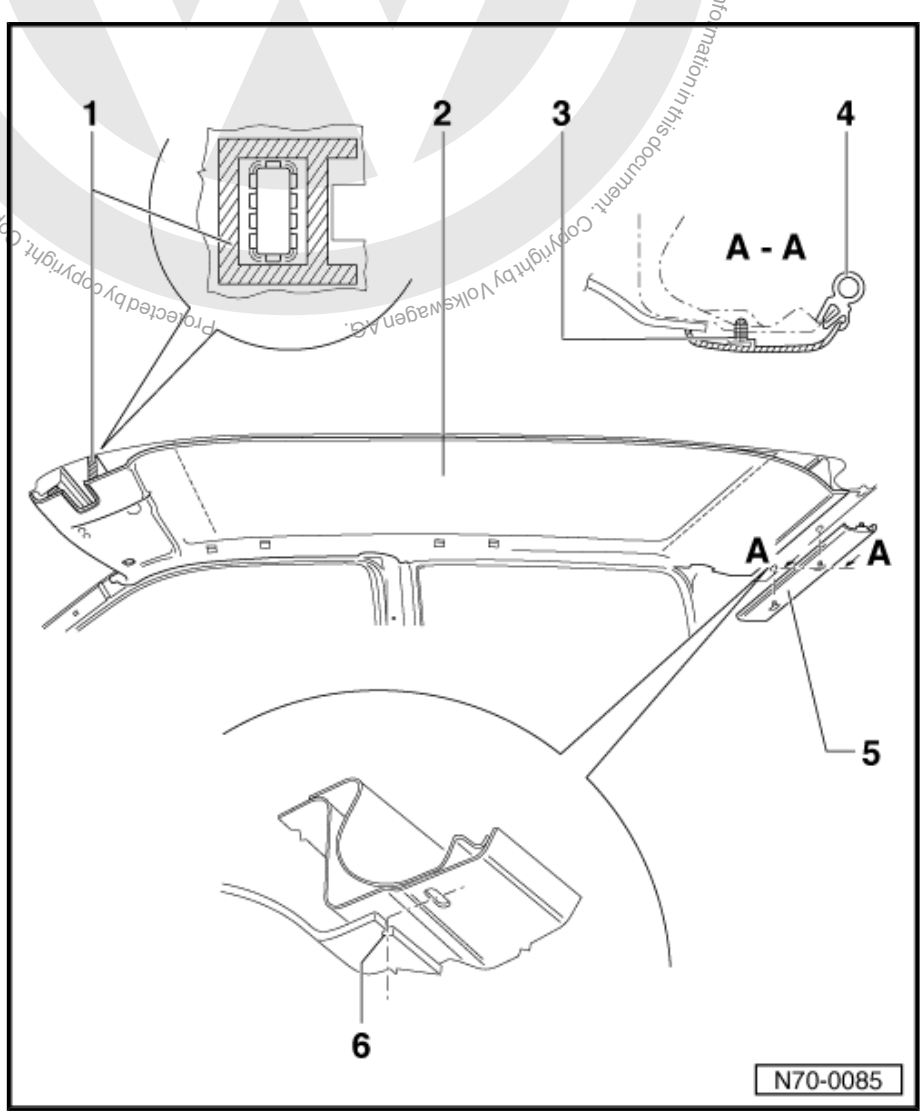

satelettronica

4.2 Removing and installing moulded headlining 10.99 ▸

Note

- *Before disconnecting the battery see the note concerning the coding in the instruction manual for the radio.*
- *After reconnecting the battery, ensure vehicle equipment (radio, clock, electric windows) are checked as per Workshop manual/Owner's manual.*

4.2.1 Removing

WARNING

Disconnect battery earth strap before working on electrical system.

– Take out luggage compartment cover.

– Remove support for right luggage compartment cover ⇒ page 108 .

– Remove support for left luggage compartment cover 10.99 ▸ ⇒ page 108 .

– Remove A-pillar trim ⇒ page 94 .

– Remove upper B-pillar trims 10.99 ▸ ⇒ page 97 and ⇒ page 98 .

– Remove upper C-pillar trims 10.99 ▸ ⇒ page 101 and ⇒ page 102 .

– Unscrew sun visors -1- and sun visor support -2- (turn sun visor support 90° to remove) and disconnect connections for mirror illumination.

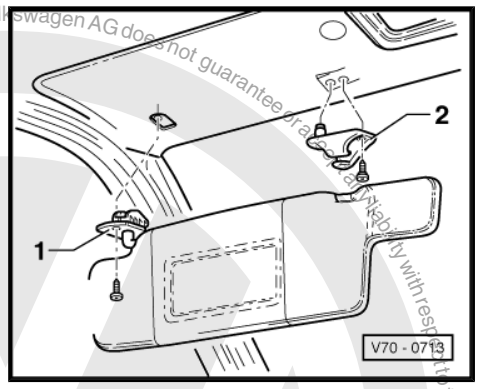

– Fold grab handle -1- down.

– Lever covers -2- up using screwdriver and fold open.

– Unscrew cross-head screws -3- and take off handle-1-.

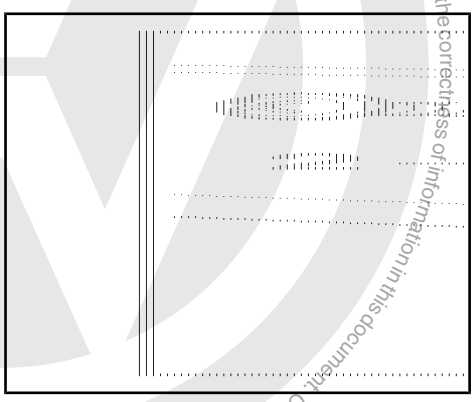

Protected by copyright. Copying for private or commercial purposes, in part or in whole, is not permitted unless authorised by Volkswagen AG. Volkswagen AG does not guarantee or accept any liability with respect to the correctness of information in this document. Copyright by Volkswagen AG.
satelettronica

– Use a small screwdriver to push back the interior motion sensor spring -1-.
– Pull out interior motion sensor -2- and disconnect connector.
– Fold sun visor -2- down.

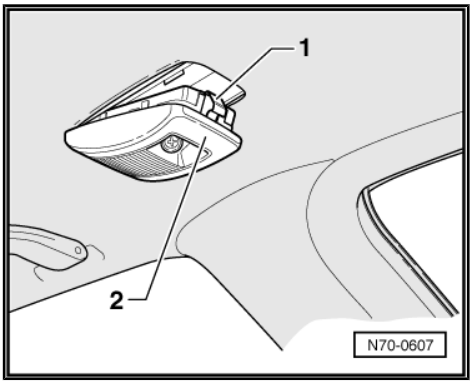

– Remove self-tapping screw -1- from roof cross member and remove sun visor.
– Use a small screwdriver to push back the interior light spring -3-.
– Pull out interior light -4- and disconnect connector -5-.
– Pull off end strip -6- (secured with clips) downwards from roof frame.
– Lower moulded headlining -7- with help of second mechanic (danger of breakage) and remove from vehicle.

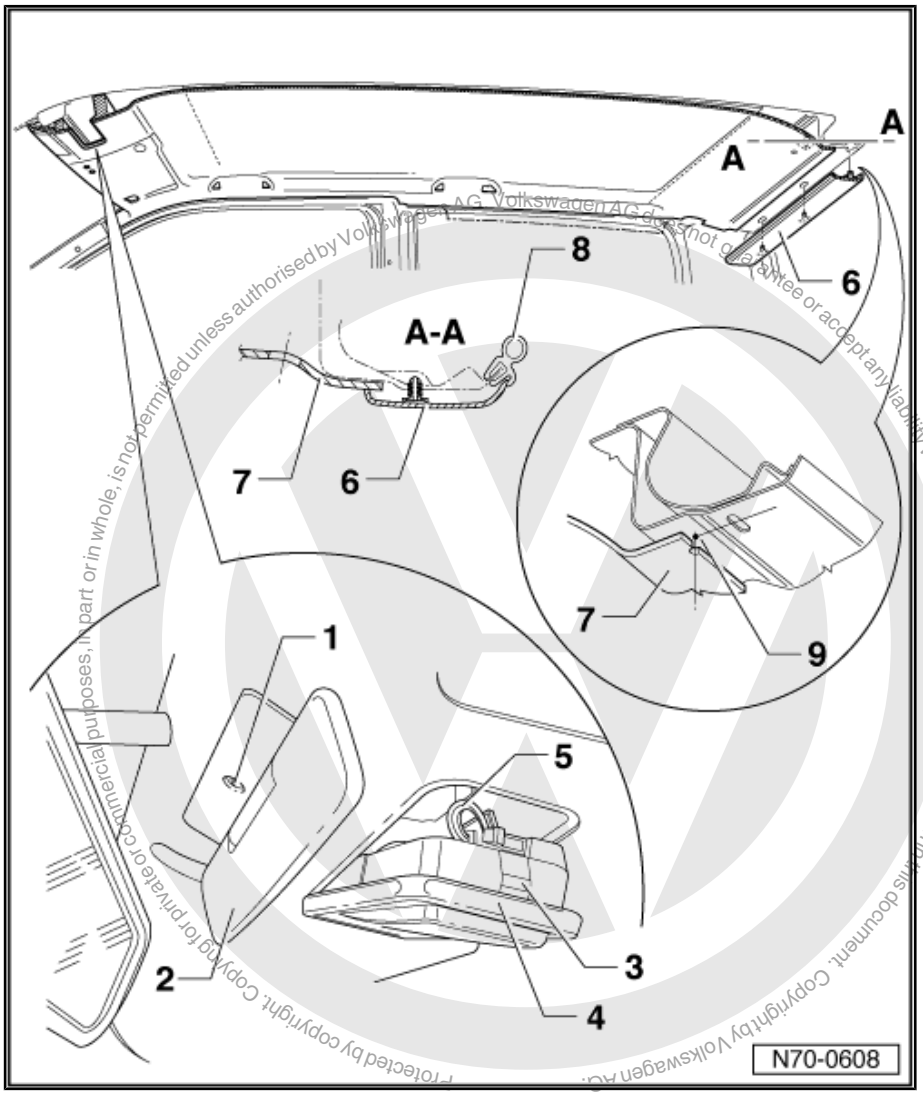

satelettronica
Protected by copyright. Copying for private or commercial purposes, in part or in whole, is not permitted unless authorised by Volkswagen AG. Volkswagen AG does not guarantee or accept any liability with respect to the correctness of information in this document. Copyright by Volkswagen AG.

4.2.2 Installing

- Align moulded headlining -7- to sun visor supports at front and centre marking at rear -9-.
- Secure moulded headliner at front with sun visors.
- Clip end strip -6- into roof frame.
- Attach bolt-on components.

Note

After installing end strip -6-, ensure seal -8- is seated correctly.

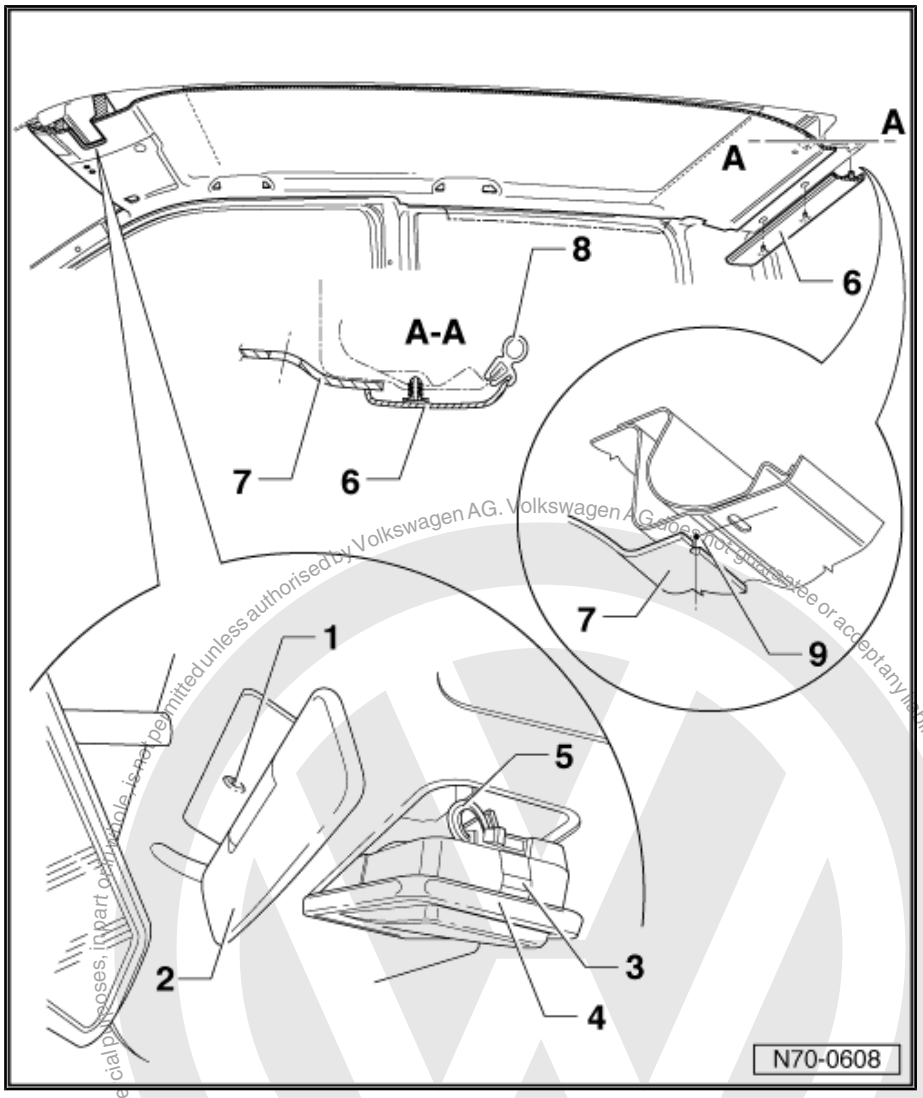

satelettronica
Protected by copyright. Copying for private or commercial purposes, in part or in whole, is not permitted unless authorised by Volkswagen AG. Volkswagen AG does not guarantee or accept any liability with respect to the correctness of information in this document. Copyright by Volkswagen AG.

4.3 Removing and installing moulded headlining with sliding/tilting sunroof ‣ 09.99

Note

- *Before disconnecting the battery see the note concerning the coding in the instruction manual for the radio.*
- *After reconnecting the battery, ensure vehicle equipment (radio, clock, electric windows) are checked as per Workshop manual/Owner's manual.*

4.3.1 Removing

WARNING

Disconnect battery earth strap before working on electrical system.

– Take out luggage compartment cover.

– Remove supports for luggage compartment cover ⇒ page 108 .

– Remove A-pillar trim ⇒ page 94 .

– Remove upper B-pillar trims ‣ 09.99 ⇒ page 95 and ⇒ page 96 .

– Remove upper C-pillar trims ‣ 09.99 ⇒ page 99 .

– Lever interior light out with a screwdriver and disconnect connectors.

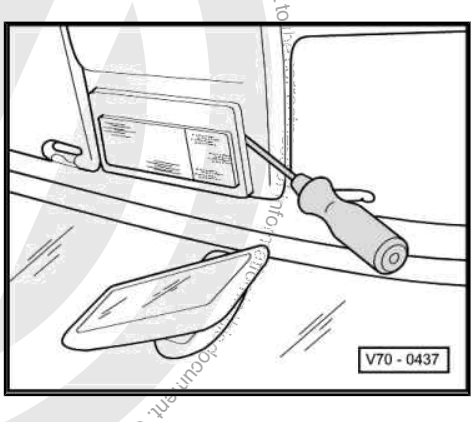

Protected by copyright. Copying for private or commercial purposes, in part or in whole, is not permitted unless authorised by Volkswagen AG. Volkswagen AG does not guarantee or accept any liability with respect to the correctness of information in this document. Copyright by Volkswagen AG.
satelettronica

– Pull off trim beading -1- for sliding/tilting sunroof with cover open.
– Lever off cap -5-.
– Unscrew Torx screw -T20- (2.5 Nm) -3-.
– Remove crank -4-.
– Unclip cover -2- in rear area and pull backwards out of moulded headlining cut-out.

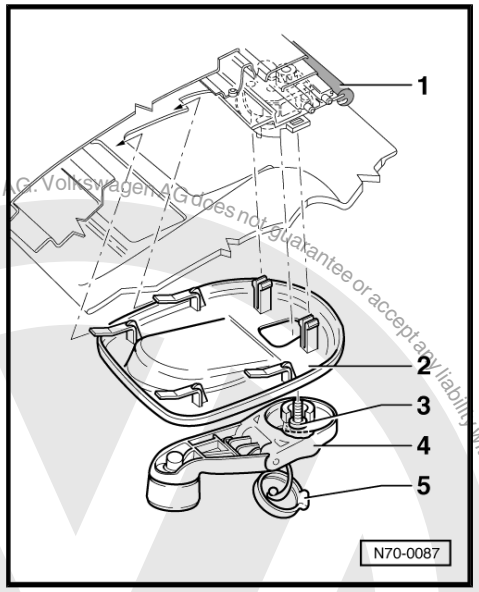

– Unscrew sun visors -1- and sun visor support -2- (turn sun visor support 90° to remove) and disconnect connections for mirror illumination.

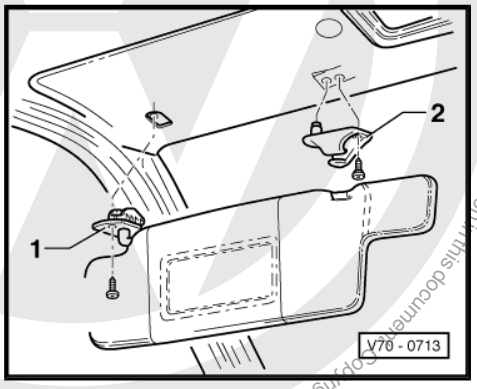

– Fold grab handle -1- down.
– Lever covers -2- up using screwdriver and fold open.
– Unscrew cross-head screws -3- and take off handle-1-.

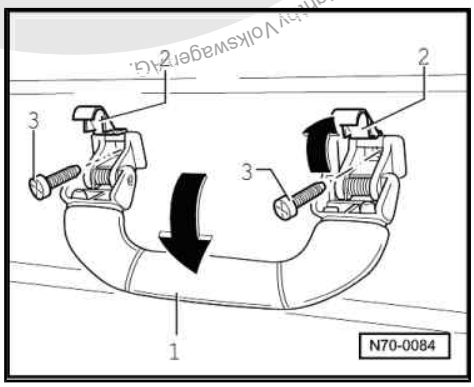

– Pull off end strip -5- (secured with clips) downwards from roof frame.
– Lower moulded headlining -2- with help of second mechanic (danger of breakage) and remove from vehicle.

Protected by copyright. Copying for private or commercial purposes, in part or in whole, is not permitted unless authorised by Volkswagen AG. Volkswagen AG does not guarantee or accept any liability with respect to the correctness of information in this document. Copyright by Volkswagen AG.
satelettronica

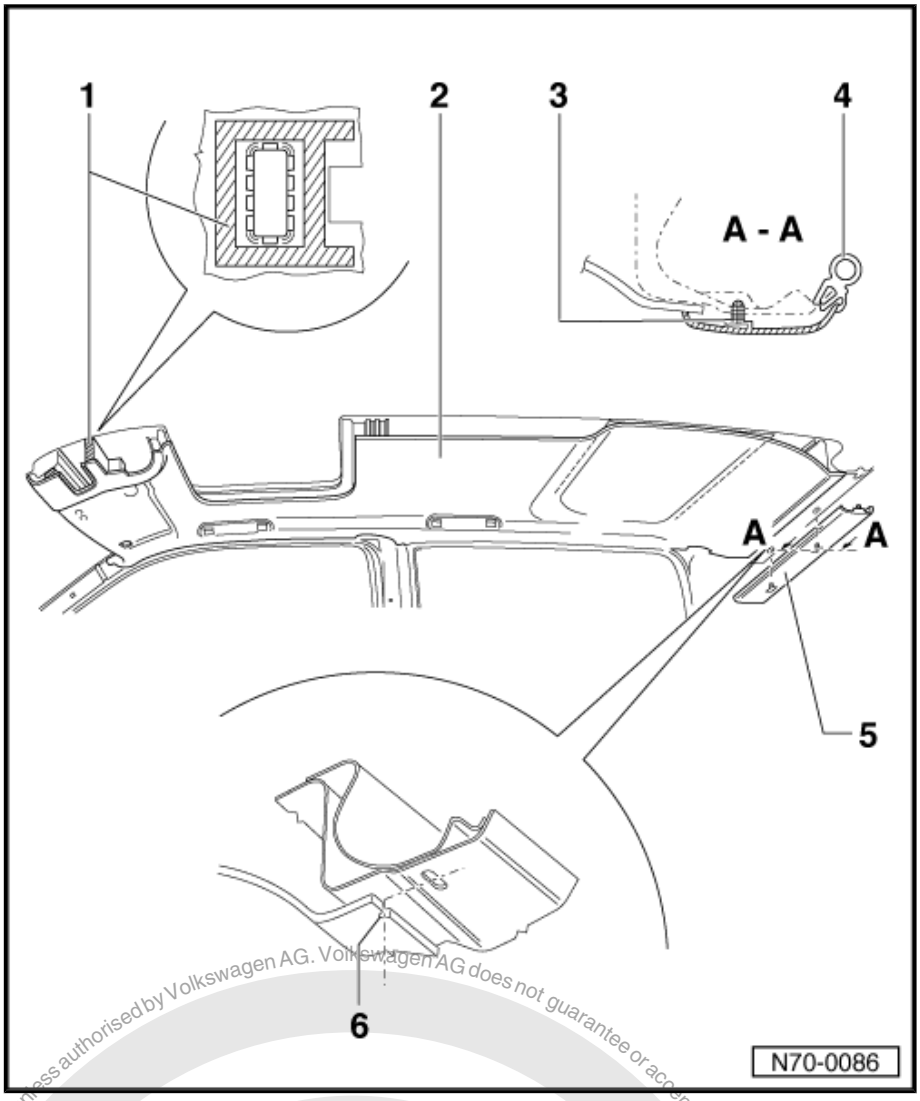

4.3.2 Installing

- Align moulded headlining -2- to sun visor supports at front and centre marking at rear -6-.
- Secure moulded headliner at front with sun visors.
- Insert clips -3- into end strip.
- Clip end strip -5- into roof frame.
- Attach bolt-on components.

Protected by copyright. Copying for private or commercial purposes, in part or in whole, is not permitted unless authorised by Volkswagen AG. Volkswagen AG does not guarantee or accept any liability with respect to the correctness of information in this document. Copyright by Volkswagen AG.
satelettronica

Note

- *After installing end strip -5-, ensure seal -4- is seated correctly.*
- *Self-adhesive spacer -1- is bonded onto rear of moulded headlining.*

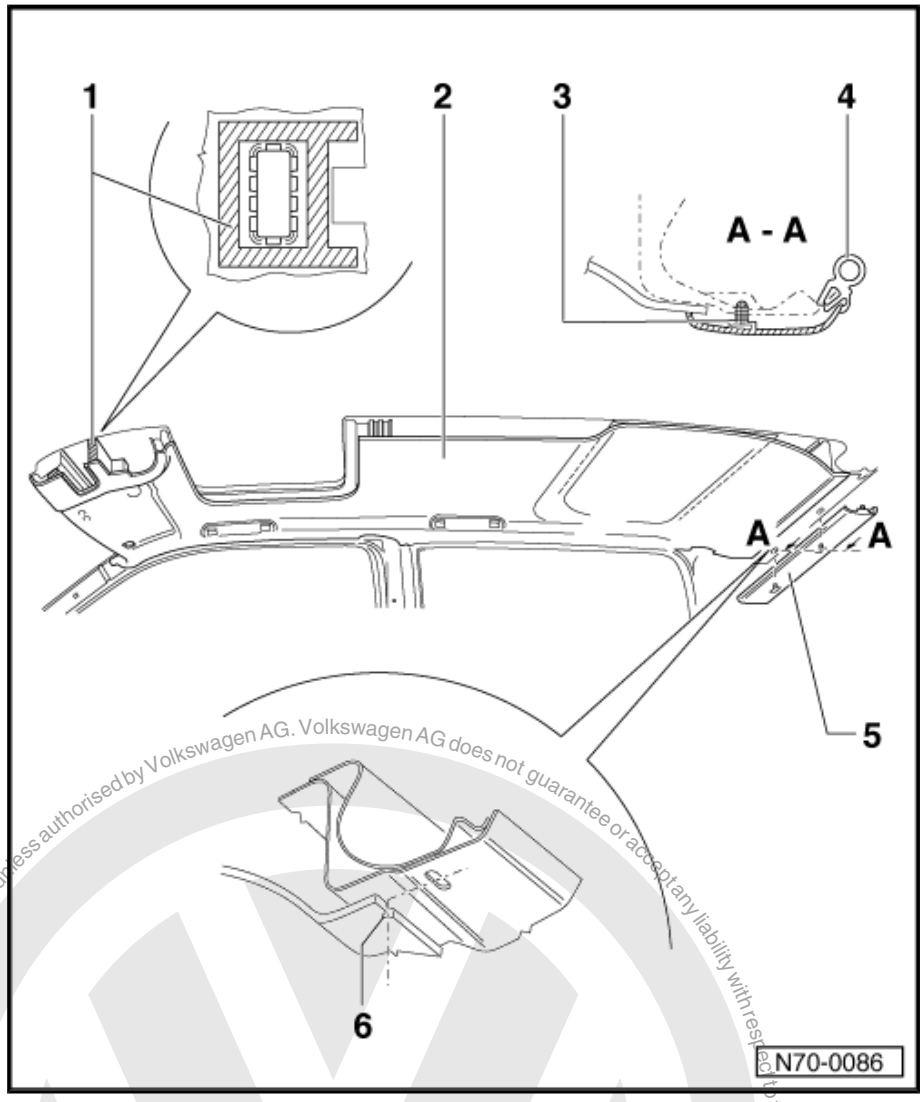

4.4 Removing and installing moulded headlining with sliding/tilting sunroof 10.99 ▸

Note

- *Before disconnecting the battery see the note concerning the coding in the instruction manual for the radio.*
- *After reconnecting the battery, ensure vehicle equipment (radio, clock, electric windows) are checked as per Workshop manual/Owner's manual.*

Protected by copyright. Copying for private or commercial purposes, in part or in whole, is not permitted unless authorised by Volkswagen AG. Volkswagen AG does not guarantee or accept any liability with respect to the correctness of information in this document. Copyright by Volkswagen AG.
satelettronica

4.4.1 Removing

WARNING

Disconnect battery earth strap before working on electrical system.

Protected by copyright. Copying for private or commercial purposes, in part or in full, is not permitted unless authorised by Volkswagen AG. Volkswagen AG does not guarantee or accept any liability with respect to the correctness of information in this document. Copyright by Volkswagen AG.

- Take out luggage compartment cover.
- Remove support for right luggage compartment cover ⇒ page 108 .
- Remove support for left luggage compartment cover 10.99 ▸ ⇒ page 108 .
- Remove A-pillar trim ⇒ page 94 .
- Remove upper B-pillar trims 10.99 ▸ ⇒ page 97 and ⇒ page 98 .
- Remove upper C-pillar trims 10.99 ▸ ⇒ page 101 and ⇒ page 102 .
- Unscrew sun visors -1- and sun visor support -2- (turn sun visor support 90° to remove) and disconnect connections for mirror illumination.

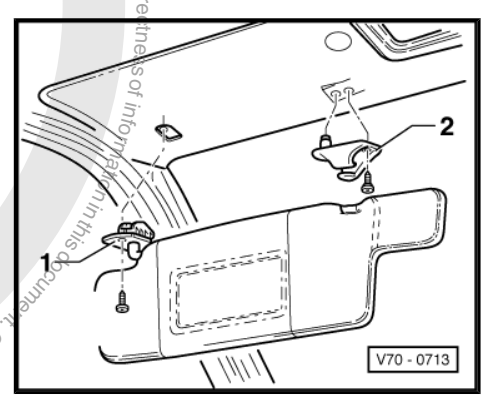

- Fold grab handle -1- down.
- Lever covers -2- up using screwdriver and fold open.
- Unscrew cross-head screws -3- and take off handle-1-.

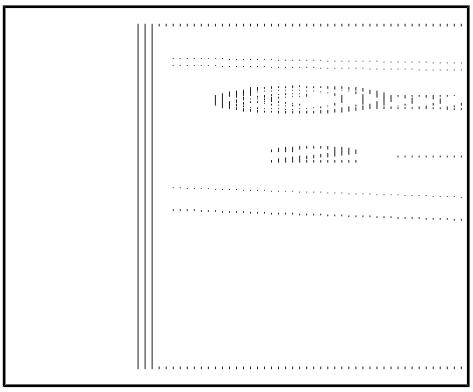

- Use a small screwdriver to push back the interior motion sensor -2- spring -1-.
- Pull out interior motion sensor -2- and disconnect connector.

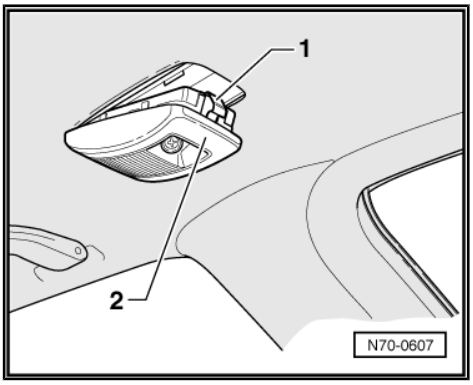

- Unclip cover -1- with interior light.

satelettronica

Protected by copyright. Copying for private or commercial purposes, in part or in whole, is not permitted unless authorised by Volkswagen AG. Volkswagen AG does not guarantee or accept any liability with respect to the correctness of information in this document. Copyright by Volkswagen AG.

- Disconnect connector -2-.
- Remove two screws -3-.
- Fold sun visor -5- down.
- Remove self-tapping screw -4- from roof cross member and remove sun visor.
- Pull off end strip -6- (secured with clips) downwards from roof frame.
- Lower moulded headlining -7- with help of second mechanic (danger of breakage) and remove from vehicle.

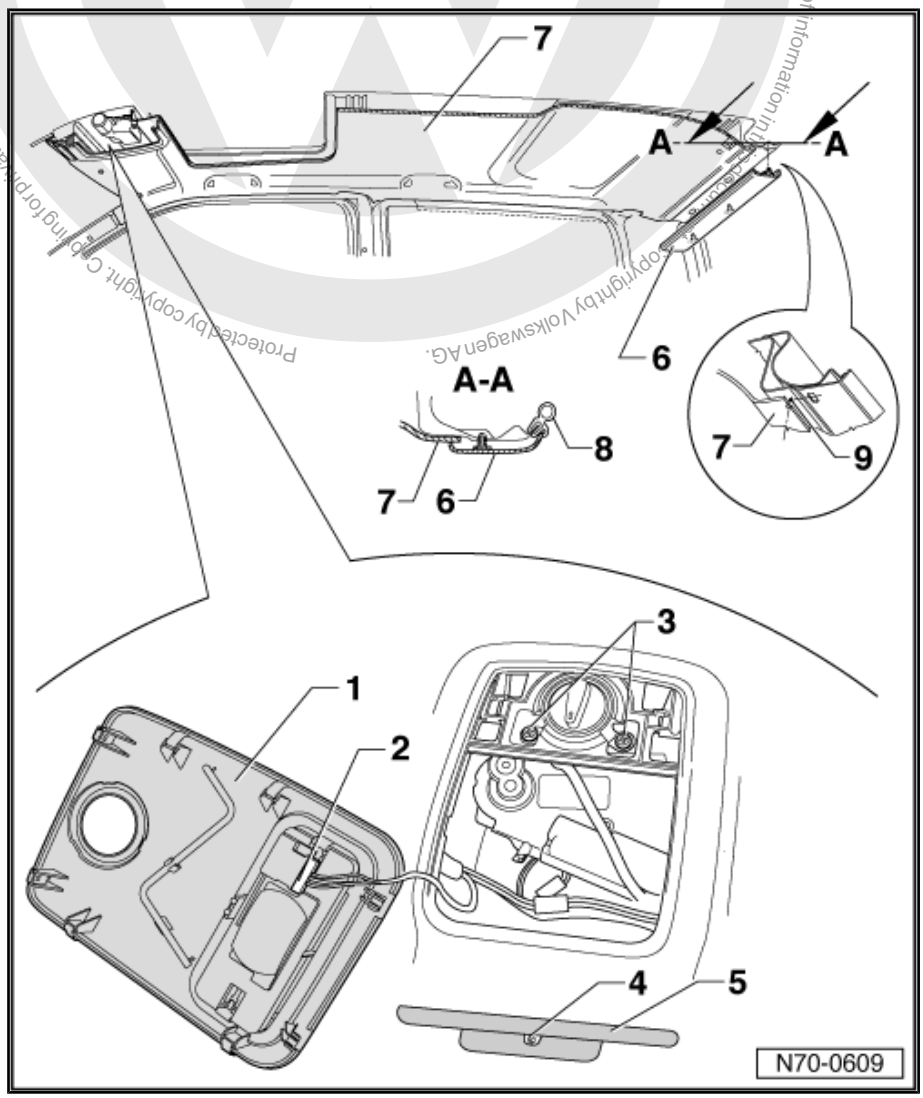

4.4.2 Installing

- Align moulded headlining -7- to sun visor supports at front and centre marking at rear -9-.
- Secure moulded headliner at front with sun visors.
- Clip end strip -6- into roof frame.
- Attach bolt-on components.

satelettronica

Note

After installing end strip -6-, ensure seal -8- is seated correctly.

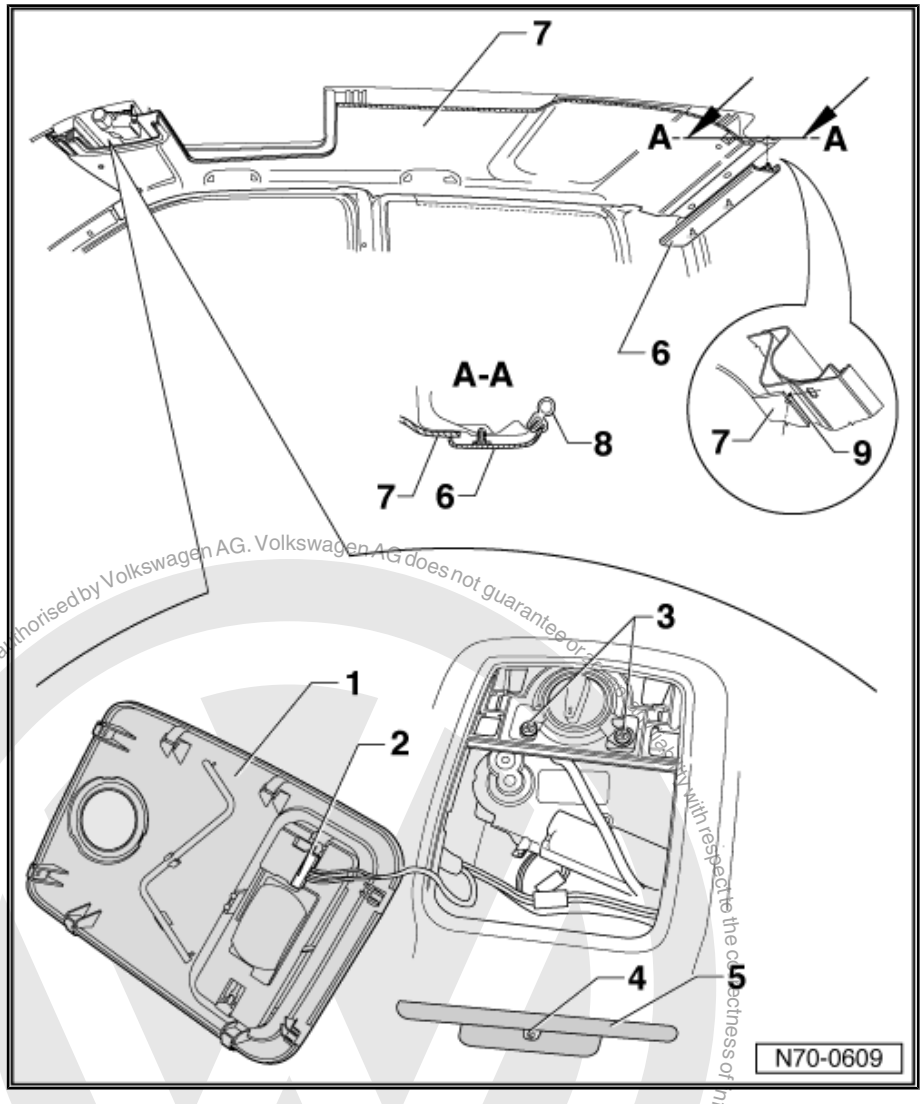

Protected by copyright. Copying for private or commercial purposes, in part or in whole, is not permitted unless authorised by Volkswagen AG. Volkswagen AG does not guarantee or assume any liability with respect to the correctness of information in this document. Copyright by Volkswagen AG.
satelettronica

72 – Seat frames

1 Front seats

1.1 Tools

Special tools and workshop equipment required

- Airbag adapter -VAS 5094-

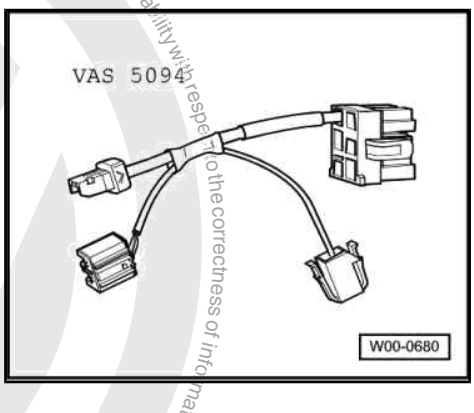

1.2 Removing and installing seat ▸ 09.99

1.2.1 Removing

Note

In vehicles with seat heating, note the warning text and the notes on ⇒ page 135 .

– Slide seat forwards.

– Remove cover strip -1- backwards in -direction of arrow- from inner seat rail.

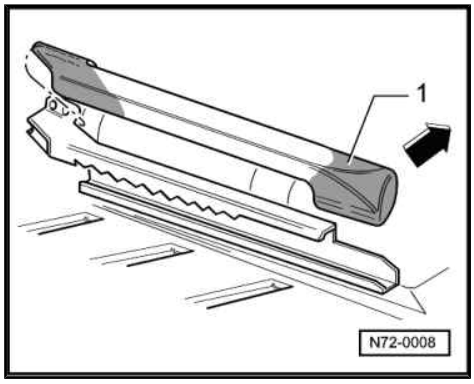

Protected by copyright. Copyright by Volkswagen AG. Volkswagen AG does not guarantee or accept any liability with respect to the correctness of information in this document. Copying for private or commercial purposes, in part or in whole, is not permitted unless authorised by Volkswagen AG.
satelettronica

– Use a screwdriver to push lock backwards and remove cover from seat rail in -direction of arrow-.

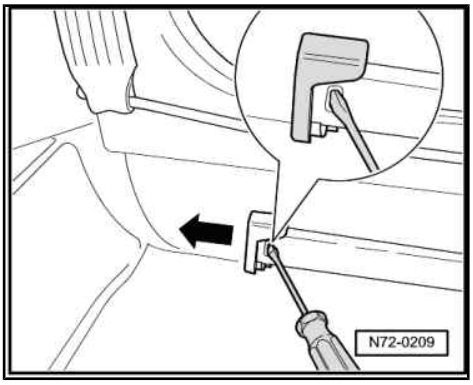

– Push together clip -1- and take out.
– Separate connector for seat heating (if fitted).
– Release detent rod and slide seat back out of guide rails.

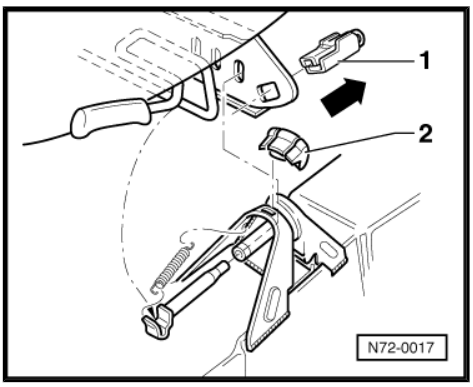

1.2.2 Installing

– Installation is carried out in the reverse order.

Note

If longitudinal adjustment is difficult and play is excessive, rear seat slides and front slide -2- must be checked and renewed if necessary.

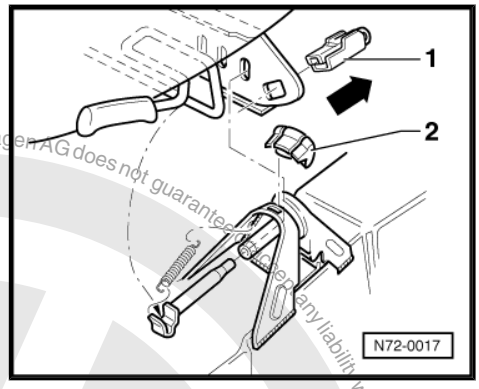

1.3 Removing and installing front seat 10.99

▸

1.3.1 Removing

Note

In vehicles with seat heating, note the warning text and the notes on ⇒ page 135 .

– Slide seat forwards.

satelettronica
Protected by copyright. Copying for private or commercial purposes, in part or in whole is not permitted unless authorised by Volkswagen AG. Volkswagen AG does not guarantee or accept any liability with respect to the correctness of information in this document. Copyright by Volkswagen AG.

– Remove cover strip -1- backwards in -direction of arrow- from inner seat rail.

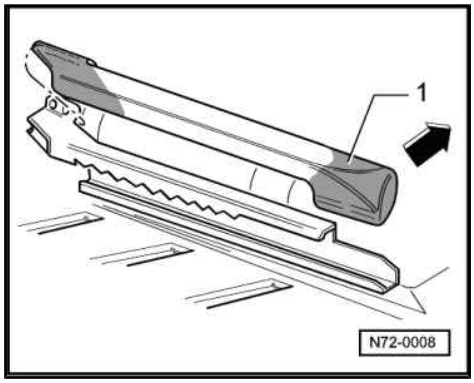

– Use a screwdriver to push lock backwards and remove cover from seat rail in -direction of arrow-.

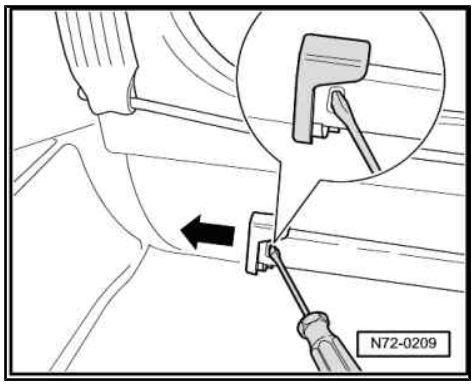

– Unscrew cap nut -1- and remove bolt -2-.
– Separate connector for seat heating (if fitted).
– Release detent rod and slide seat back out of guide rails.

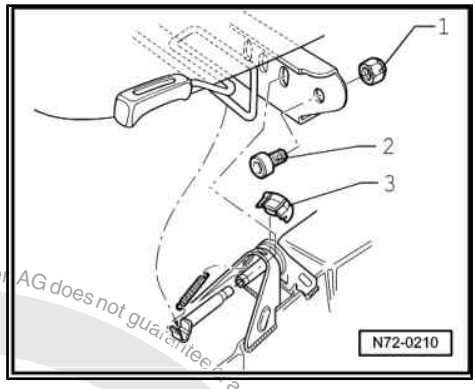

1.3.2 Installing

Installation is carried out in the reverse order.

Note

If longitudinal adjustment is difficult and play is excessive, rear seat slides and front slide -3- must be checked and renewed if necessary.

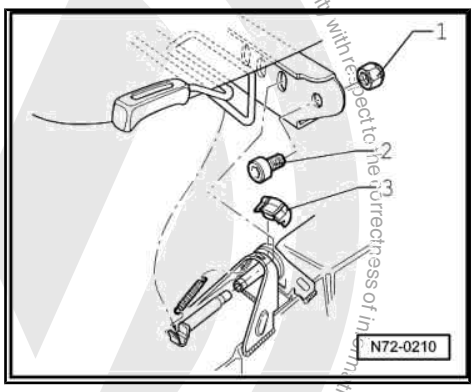

Protected by copyright. Copying for private or commercial purposes, in part or whole, is not permitted unless authorised by Volkswagen AG. Volkswagen AG does not guarantee or accept any liability with respect to the correctness of information in this document. Copyright by Volkswagen AG.
satelettronica

1.4 Removing and installing front seat with side airbag 10.99 ▸

Note

- *Before disconnecting the battery see the note concerning the coding in the instruction manual for the radio.*
- *After reconnecting the battery, ensure vehicle equipment (radio, clock, electric windows) are checked as per Workshop manual/Owner's manual.*

1.4.1 Removing

WARNING

Disconnect battery earth strap before working on electrical system.

– Slide seat forwards.

– Remove cover strip -1- backwards in -direction of arrow- from inner seat rail.

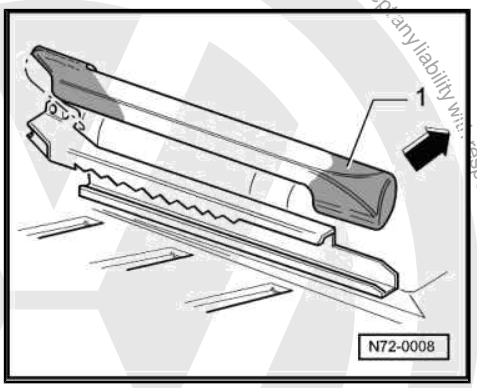

– Use a screwdriver to push lock backwards and remove cover from seat rail in -direction of arrow-.

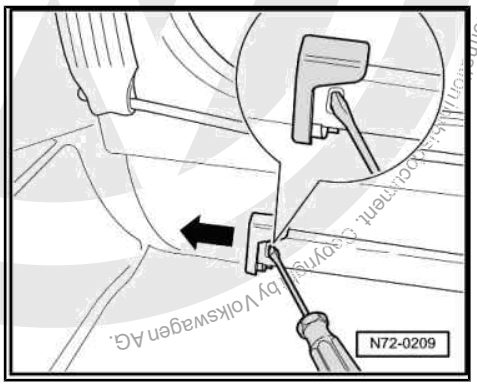

– Unscrew cap nut -1- and remove bolt -2-.

– Release detent rod and slide seat back out of guide rails.

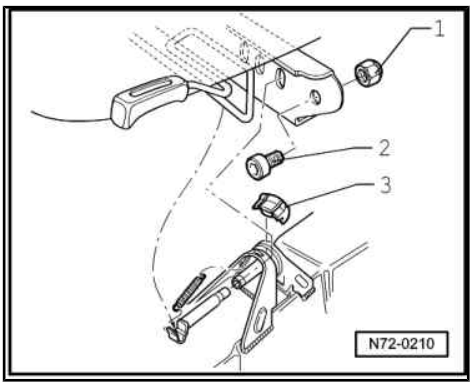

Protected by copyright. Copying for private or commercial purposes, in part or in whole, is not permitted unless authorised by Volkswagen AG. Volkswagen AG does not guarantee or accept any liability with respect to the correctness of information in this document. Copyright by Volkswagen AG.
satelettronica

Protected by copyright. Copying for private or commercial purposes, in part or in whole, is not permitted unless authorised by Volkswagen AG. Volkswagen AG does not guarantee or accept any liability with respect to the correctness of information in this document.

WARNING

Electrostatic discharges may result in unintentional triggering of airbag. Therefore, the mechanic must electrostatically discharge him/herself before disconnecting the igniter and earth wires. This can be done by briefly touching the body or striker plate of the door.

- Raise seat in rear area and disconnect wiring harness to side airbag -1- from connector housing -2-.
- Insert airbag adapter -VAS 5094- into connector housing -2-.
- Separate connector for seat heating (if fitted).

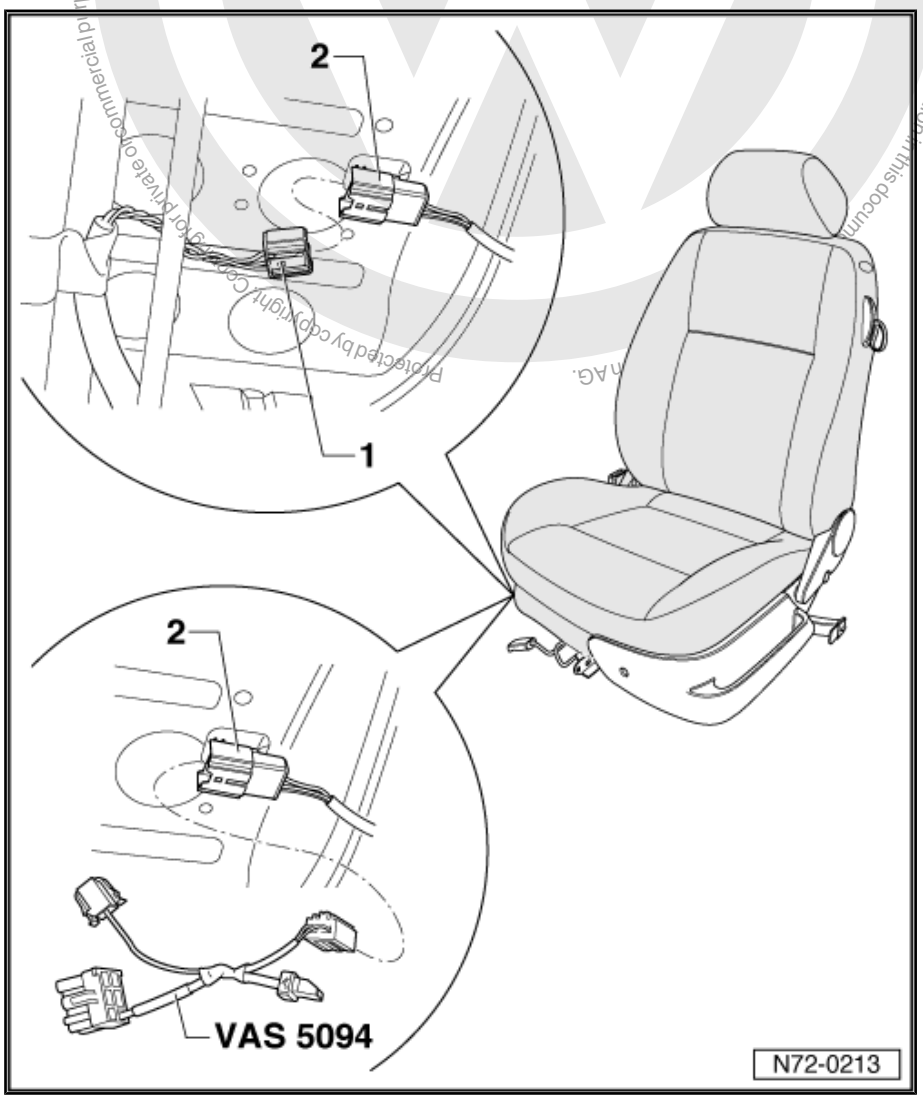

1.4.2 Installing

- Installation is carried out in the reverse order.

satelettronica

Note

If the airbag warning lamp -K75- signals a fault after assembling then the fault memory must be erased and interrogated again with fault reader -V.A.G 1551- ⇒ Body self-diagnosis; Rep. Gr. 01 ; Self-diagnosis for airbag systems .

1.5 Removing and installing backrest

1.5.1 Assembly overview

1 - Circlip

2 - Torx bolt
- ❑ 4 Nm
- ❑ Self-locking

3 - Bush

4 - Spreader pin

5 - Cover

6 - Spacer ring
- ❑ With old design only.
- ❑ In new design, spacer ring is cast onto trim ⇒ Item 7 (page 137) .

7 - Trim panel
- ❑ Removing:
- – Remove backrest.
- – Unscrew cross-head screw ⇒ Item 8 (page 137) and remove spacer ring ⇒ Item 6 (page 137) if necessary.
- – Remove Torx screw ⇒ Item 2 (page 137) and pull off bush ⇒ Item 3 (page 137) .
- – Lift rear trim over back-rest fulcrum pin and slide forwards.

8 - Cross-head screw

9 - Adjusting knob

10 - Locating pin

11 - Retaining hook

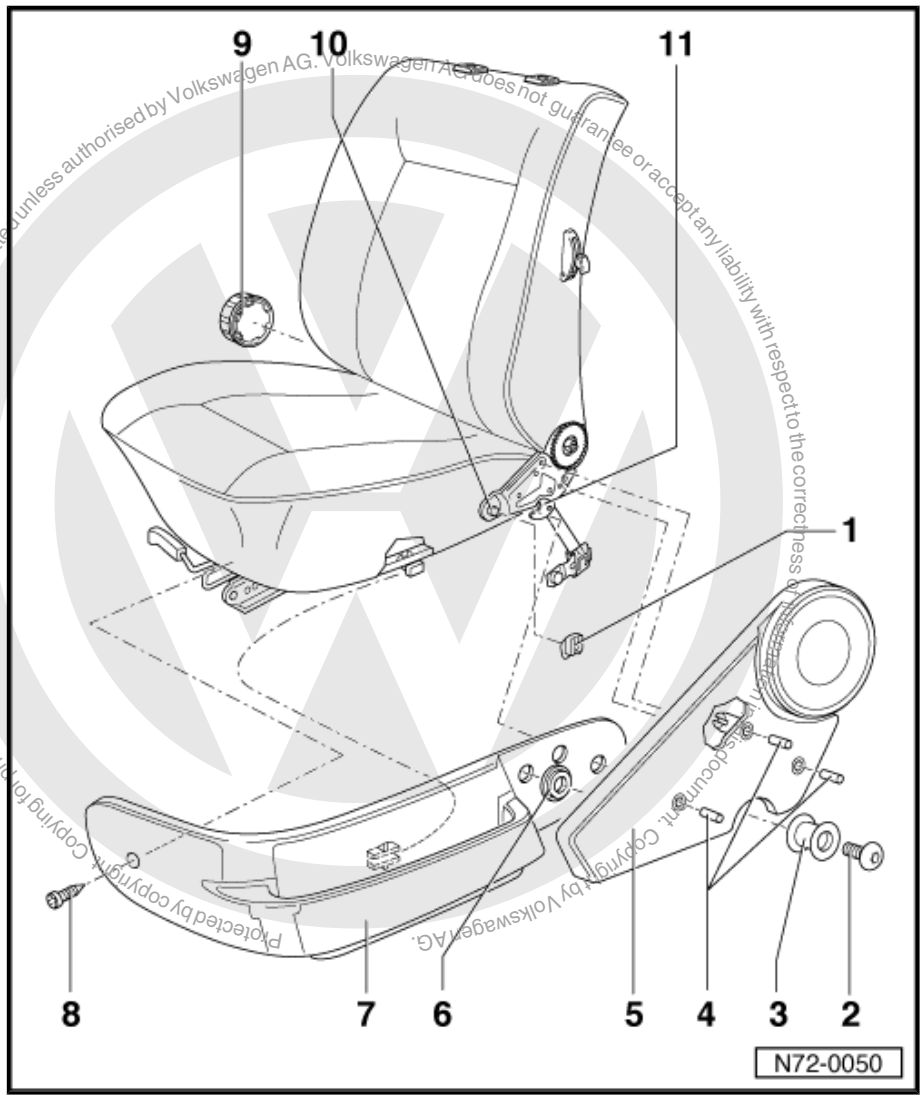

1.5.2 Removing

- – Remove seat ⇒ page 132 .
- – Press off adjusting knob -9-.

satelettronica

– Drive spreader pins -4- (left and right) inwards. If necessary, press spreader pins, which come into contact with seat frame or upholstery, down from above with a screwdriver.
– Pull cover -5- (left and right) off backrest frame.
– Pull off circlip -1- (left and right).
– Release retaining hook -11- and fold backrest forwards.
– Pull off backrest frame (left and right) from bearing pin -10-.

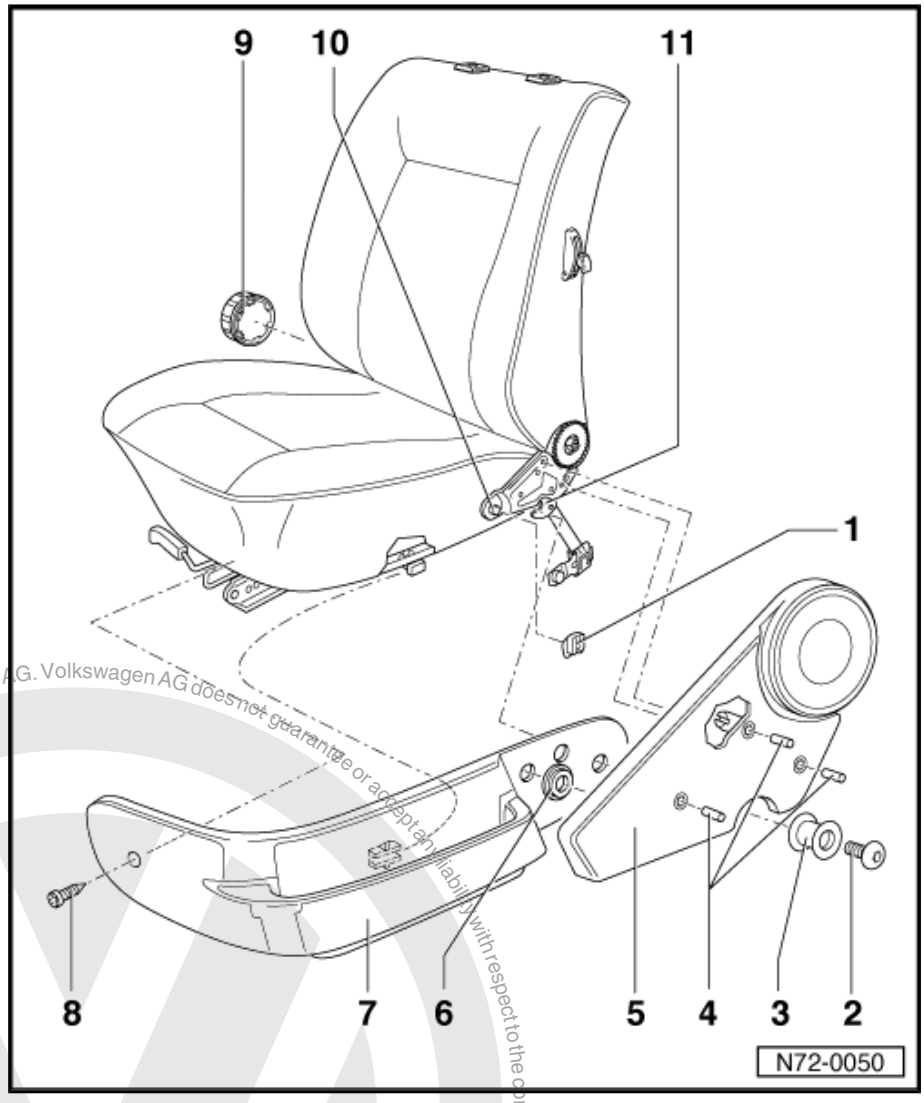

1.5.3 Installing

Installation is carried out in the reverse order.

Note

- *Check bushes -3- (left and right) for damage and renew if required.*
- *Install trim -7- before installing backrest and ensure that spacer ring -6- is installed in the older design.*

Protected by copyright. Copying for private or commercial purposes, in part or in whole, is not permitted unless authorised by Volkswagen AG. Volkswagen AG does not guarantee or accept any liability with respect to the correctness of information in this document. Copyright by Volkswagen AG.
satelettronica

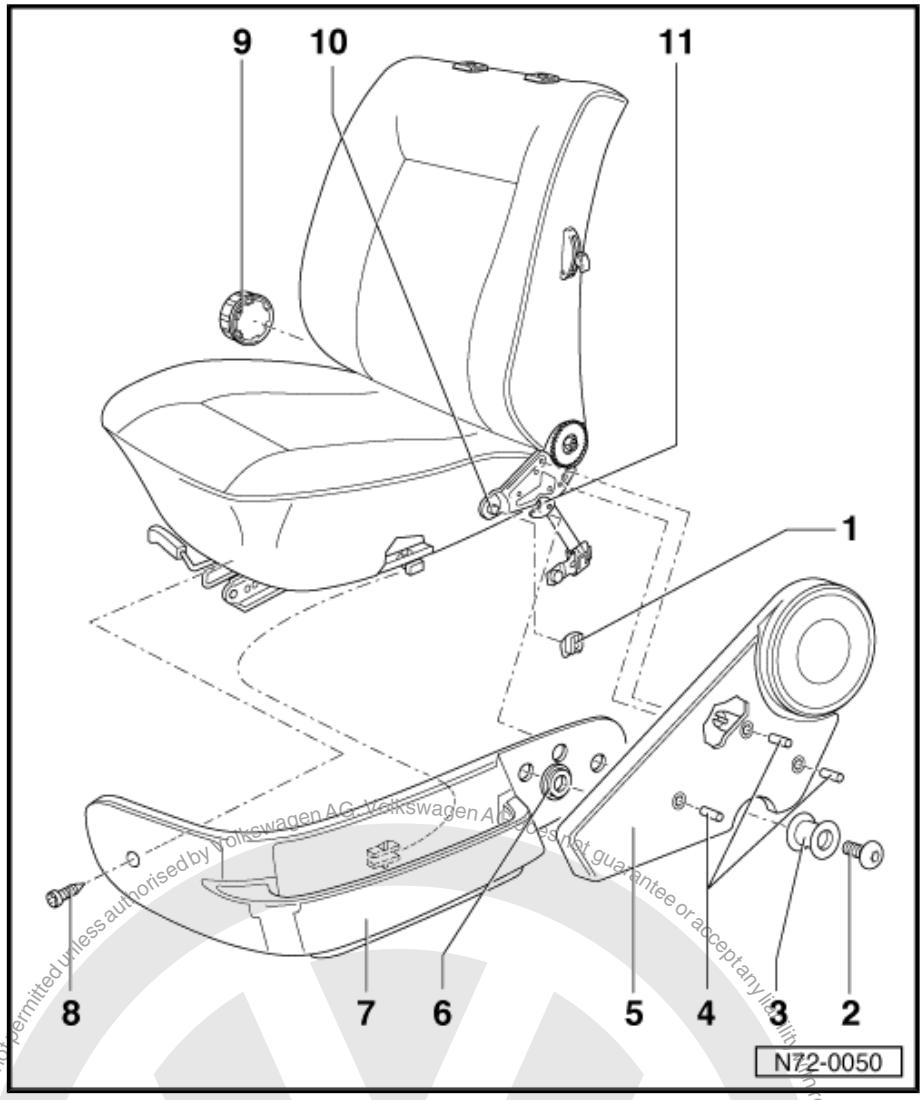

1.6 Assembly overview - seat frame (normal and sport seat)

Note

- *Only the sport seat frame, with and without height adjustment, is available as a spare part.*
- *If a normal seat is required, the support bars ⇒ Item 12 (page 140) must be cut off with angle grinder - V.A.G 1422/A- .*
- *The cutting points must be deburred and treated with corrosion protection primer -ALN 002 003 04-.*

Protected by copyright. Copyright by Volkswagen AG.
Volkswagen AG does not guarantee or accept any liability with respect to the correctness of information in this document.
Copyright by Volkswagen AG. Copying for private or commercial purposes, in part or in whole, is not permitted unless authorised by Volkswagen AG.
satelettronica

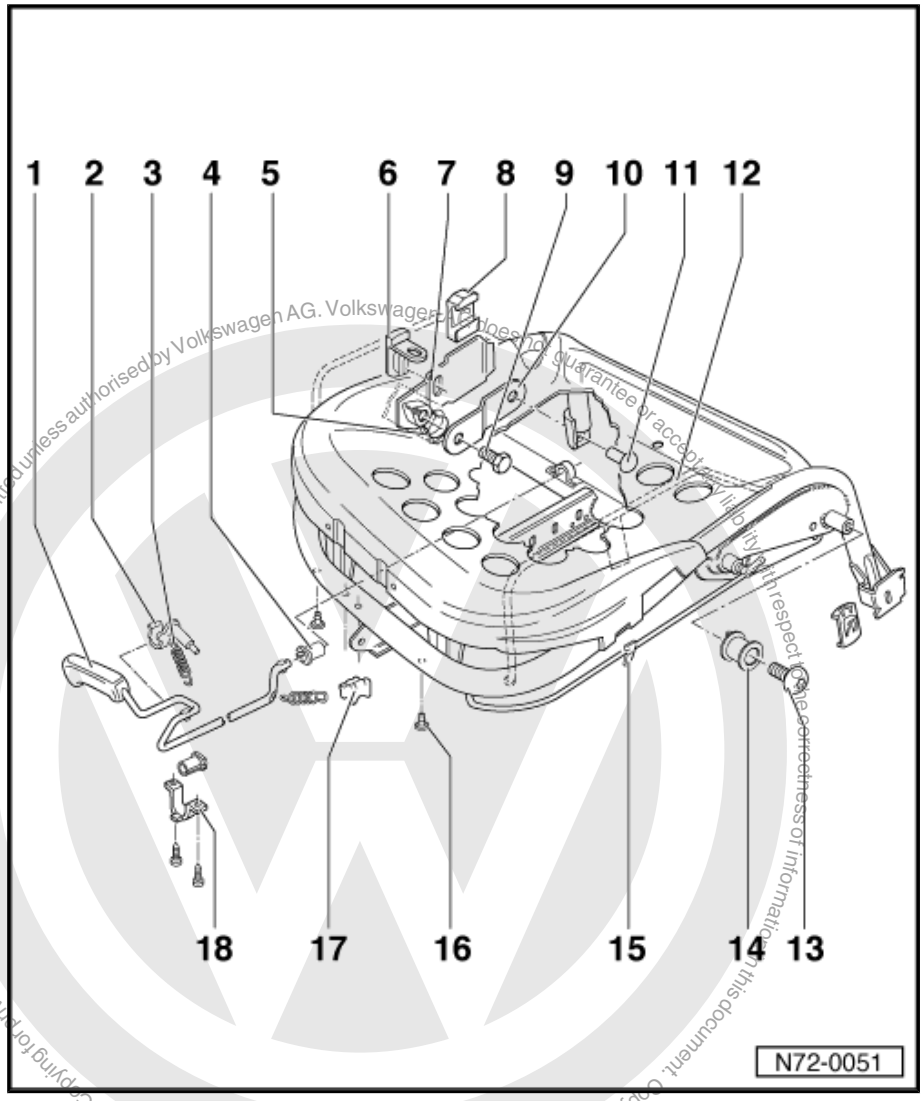

1 - Release lever

2 - Detent rod
- ❑ Lubricate with multi-purpose grease

3 - Spring

4 - Bearing bush

5 - Clip
- ❑ Seat with height adjustment only.

6 - Thrust piece
- ❑ Seat with height adjustment only.
- ❑ Press thrust piece in guide plate and fold over tab

7 - Guide plate

8 - Guide

9 - Hexagon head bolt
- ❑ 60 Nm

10 - Reinforcement plate

11 - Rivet

12 - Support bar (sport seat only)

13 - Torx bolt
- ❑ 4 Nm
- ❑ Self-locking

14 - Bush

15 - Hook in points for cover

16 - Clip for cover

17 - Guide
- ❑ Lubricate contact surface of seat frame with multi-purpose grease

18 - Bearing support

Protected by copyright. Copying for private or commercial purposes, in part or in whole, is not permitted unless authorised by Volkswagen AG. Volkswagen AG does not guarantee or accept any liability with respect to the correctness of information in this document. Copyright by Volkswagen AG.
satelettronica

1.7 Assembly overview - backrest frame (normal and sport seat)

1 - Backrest frame

2 - Release lever
- ❑ Only 2-door.

3 - Cable guide
- ❑ Only 2-door.

4 - Adjusting knob

5 - Torx bolt
- ❑ 6 Nm

6 - Cable
- ❑ Only 2-door.

7 - Retaining hook

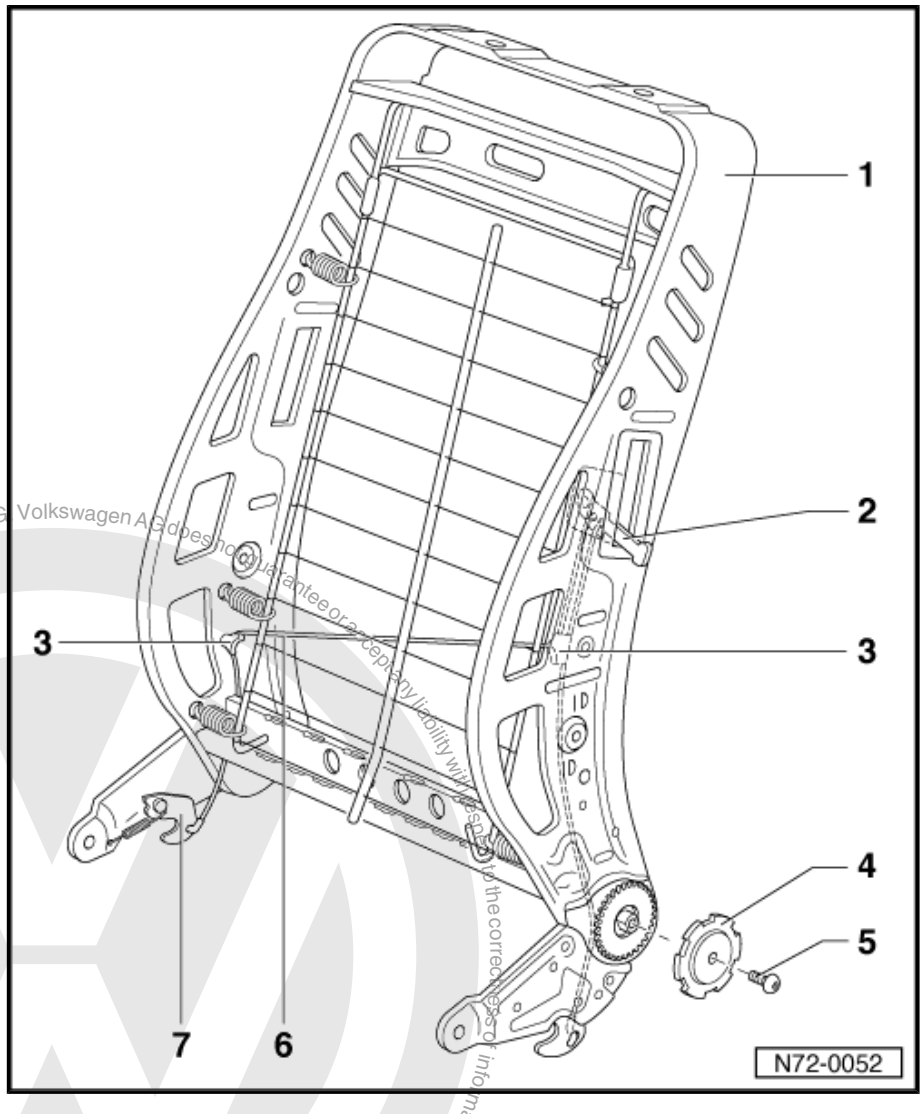

Protected by copyright. Copying for private or commercial purposes, in part or in whole, is not permitted unless authorised by Volkswagen AG. Volkswagen AG does not guarantee or accept any liability with respect to the correctness of information in this document. Copyright by Volkswagen AG.
satelettronica

2 Rear seats

2.1 Removing and installing (split folding) bench seat and backrest

2.1.1 Removing

– Pull bench seat parts forwards and fold up.

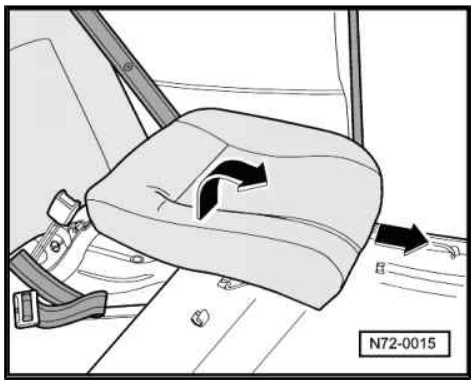

– Press spring clips -1- in -direction of arrow- and guide out of hinges -2-.
– Remove both parts of bench seat from vehicle.
– Release both backrest parts and fold down.

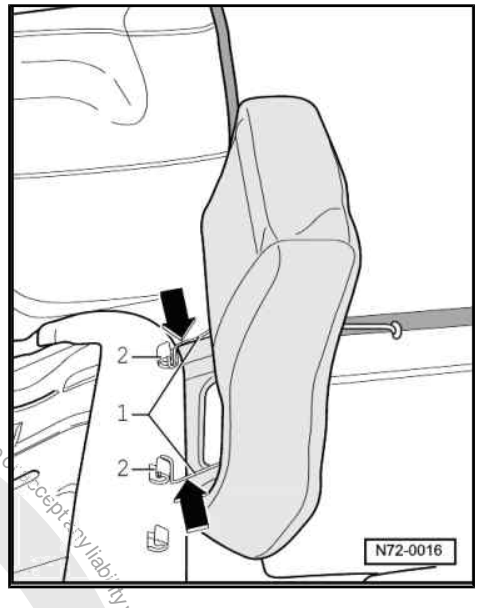

– Pull off circlips -1- from pins of adapters -2- on middle bearing of backrest parts.

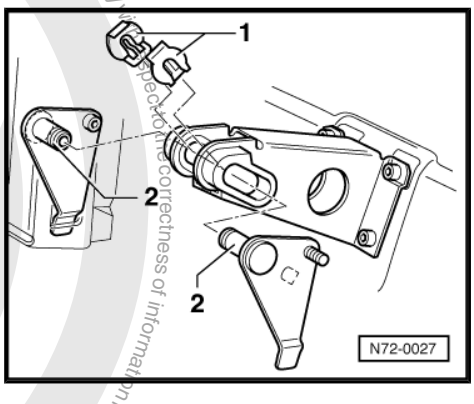

Protected by copyright. Copying for private or commercial purposes, in part or in whole, is not permitted unless authorised by Volkswagen AG. Volkswagen AG does not guarantee or accept any liability with respect to the correctness of information in this document. Copyright by Volkswagen AG.
satelettronica

– At outer sides of backrest parts, press back locking hooks -1- with a screwdriver and pull backrest parts -2- up out of backrest fulcrums -3-.
– Guide inner sides of backrest parts out of centre fulcrum.

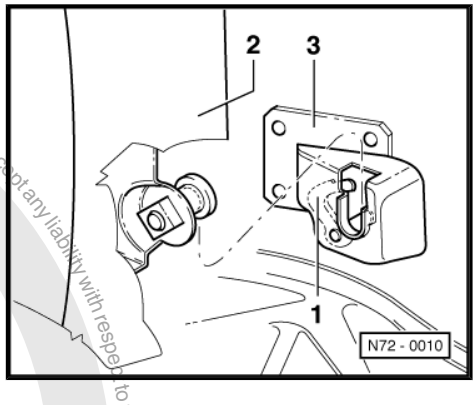

2.1.2 Installing

– Installation is carried out in reverse order of removal.

Protected by copyright. Copying for private or commercial purposes, in part or in whole, is not permitted unless authorised by Volkswagen AG. Volkswagen AG does not guarantee or accept any liability with respect to the correctness of information in this document. Copyright by Volkswagen AG.

satelettronica

74 – Seat - padding, covers

1 Front seat covers and padding

1.1 Tools

Special tools and workshop equipment required

- Upholstery clip pliers -V.A.G 1634-

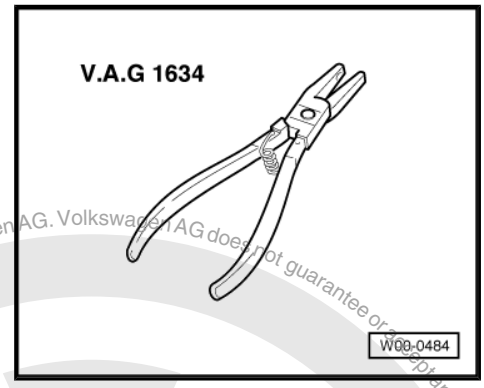

- Awl -V.A.G 1636-

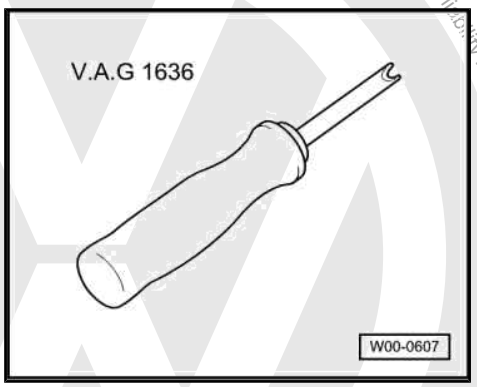

1.2 Removing and installing front seat cover and padding

1.2.1 Assembly overview

Protected by copyright. Copying for private or commercial purposes, in part or in whole, is not permitted unless authorised by Volkswagen AG. Volkswagen AG does not guarantee or accept any liability with respect to the correctness of information in this document. Copyright by Volkswagen AG.
satelettronica

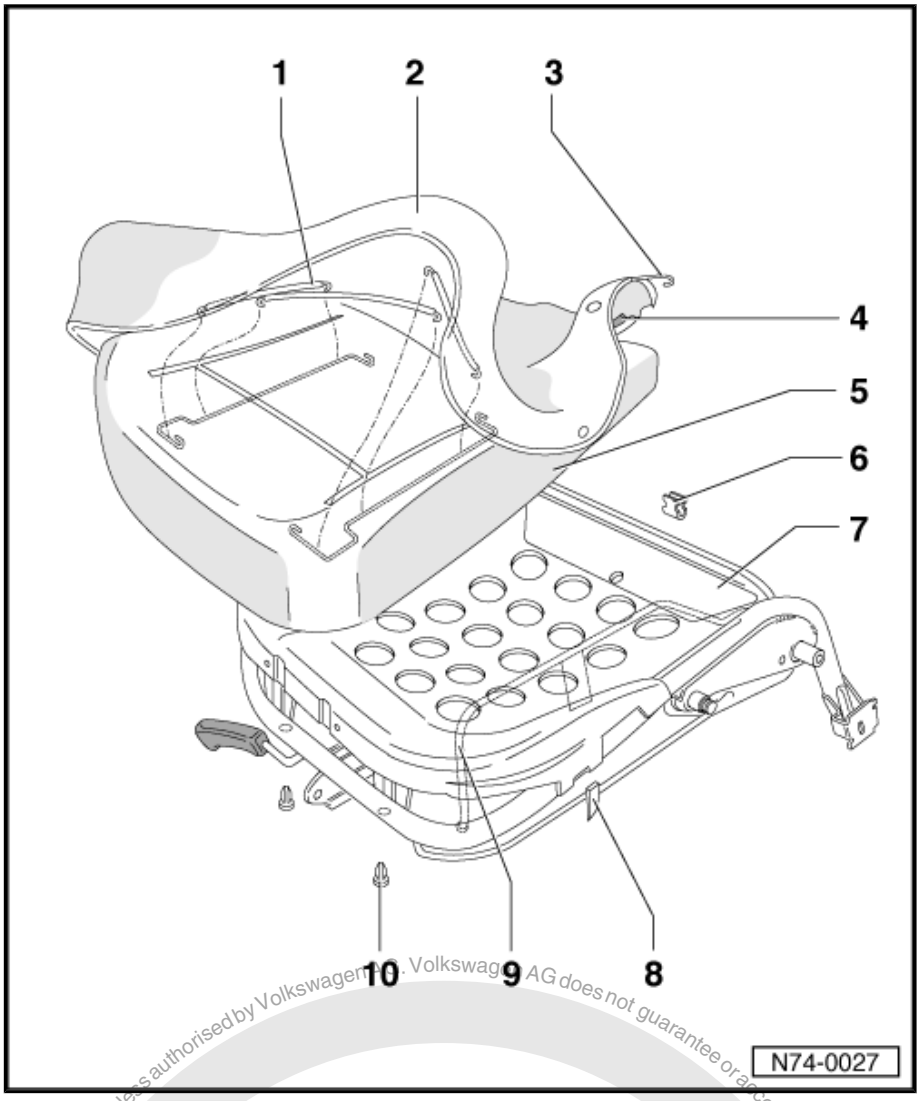

1 - Padding wire

- ❑ Attached into padding; attach and detach using awl -V.A.G 1636- .

2 - Seat cover

- ❑ Removing:
- – Remove backrest ⇒ page 137 .
- – Remove seat cover and padding ⇒ page 146 .

3 - Tensioning wire for cover

- ❑ First attach cover with clips, then attach to fasteners, pull tension wire tight and hook in

4 - Clamping strip

- ❑ Fitted to rear of seat frame from beneath
- ❑ Partly secured with three clips ⇒ Item 6 (page 145) .

5 - Padding

- ❑ Removing:
- – Remove backrest ⇒ page 137 .
- – Remove seat cover and padding ⇒ page 146 .

6 - Clip

- ❑ Only on seats whose clamping strip ⇒ Item 4 (page 145) is not plastic and on seat frames without barbs integrated onto the rear of the seat.
- ❑ In renewing cover ⇒ Item 2 (page 145) , additionally use these clips if necessary to ensure the clamping strip ⇒ Item 4 (page 145) is seated correctly.

7 - Seat frame

8 - Hook in points for cover

- ❑ On both sides.

9 - Support bar (sport seat only)

10 - Clip for cover

Protected by copyright. Copying for private or commercial purposes, in part or in whole, is not permitted unless authorised by Volkswagen AG. Volkswagen AG does not guarantee or accept any liability with respect to the correctness of information in this document. Copyright by Volkswagen AG.
satelettronica

1.2.2 Removing

– Unhook left and right tensioning wire -1-.

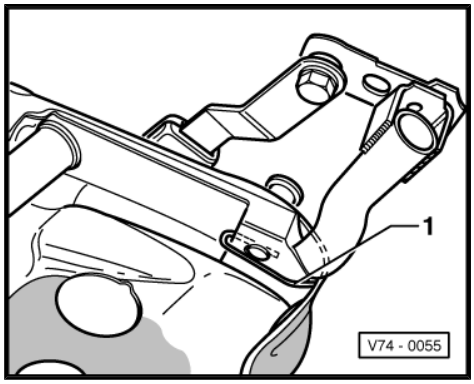

Note

When hooking in, tensioning wire -1- must be pulled slightly.

– Lever out clips -1- and bend out fasteners -2- on left and right.

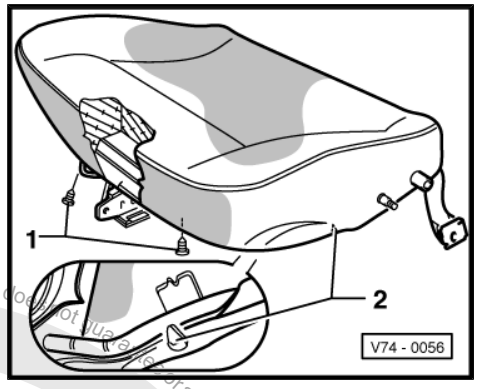

– Release clamping strip -1- from seat base.

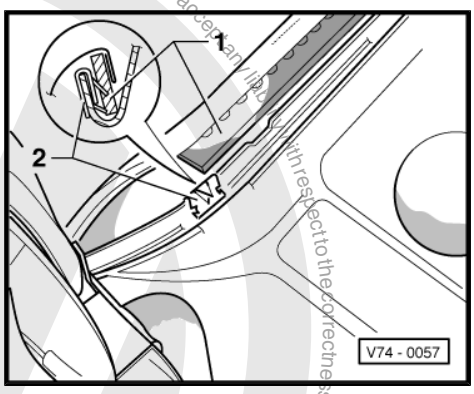

Note

Depending on the seat design, the clamping strip -1- may be secured by the clips -2-.

– Fold cover up until padding wires -1- become visible.
– Detach padding wires -1- with awl -V.A.G 1636- and pull off cover.
– Remove padding from seat frame.

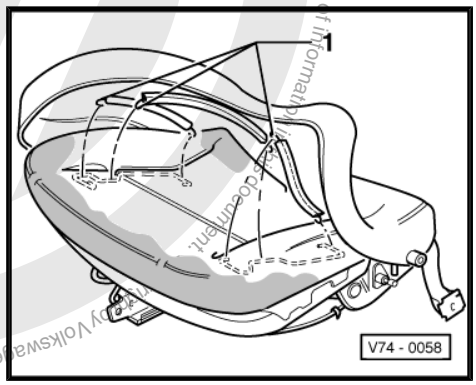

1.2.3 Installing

– Installation is carried out in reverse order of removal.

Protected by copyright. Copying for private or commercial purposes, in part or in whole, is not permitted unless authorised by Volkswagen AG. Volkswagen AG does not guarantee or accept any liability with respect to the correctness of information in this document. Copyright by Volkswagen AG.
satelettronica

Note

To aid installation, heat up cover to approx. 30 °C.

1.3 Removing and installing front backrest cover and padding

1.3.1 Assembly overview

1 - Seat cover

- ❑ Removing:
  - – Remove backrest ⇒ page 137 .
  - – Remove seat cover and padding ⇒ page 147 .
- ❑ Fitting ⇒ page 148 .

2 - Tensioning wire for cover

3 - Padding wire

- ❑ Attached into padding; attach and detach using awl -V.A.G 1636- .
- ❑ In sport seat, additionally secured with padding clips.

4 - Guide

- ❑ To remove, push up cover, press ends of guide together and pull out

5 - Clip

- ❑ Renew if damaged by removal.

6 - Trim

7 - Operating handle

- ❑ Pull off.
- ❑ Renew if damaged by removal.

8 - Cross-head screw

9 - Clip profile

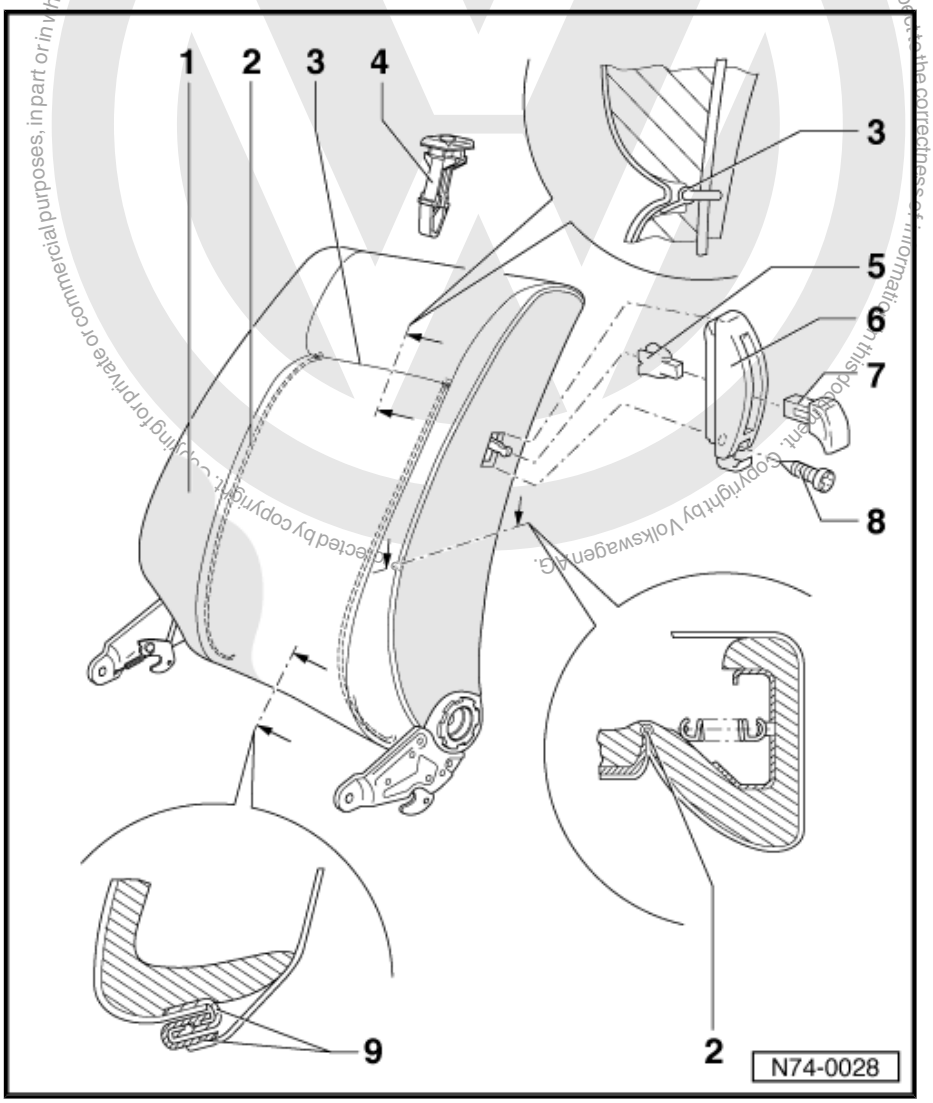

1.3.2 Removing upholstery and padding

– Remove backrest ⇒ page 137 .

– Remove head restraint from backrest.

satelettronica

– Pull operating handle -3- from backrest release (two-door vehicles only).

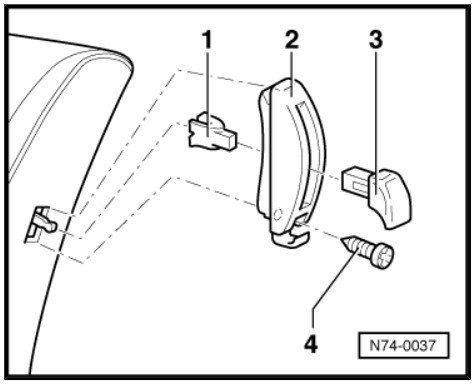

Note

If operating handle -3- or respective clip -1- is damaged, replace during installation.

– Unfold cover for cross-head screw -4- at trim -2- and unscrew cross-head screw.

– Pull off trim -2-.

– Loosen clip profiles -2- from each other on underside of backrest.

– Unhook tensioning wires -1- (sport seat only).

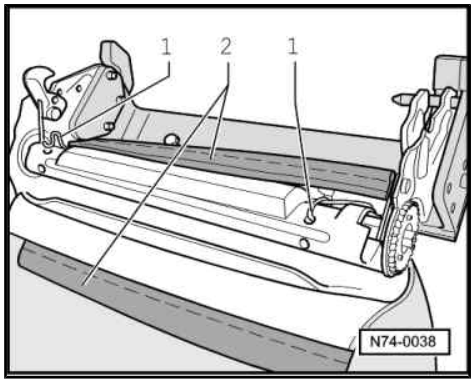

– Pull off upholstery up to padding wire -1-.

– Nip through padding clips -2- (sport seat only).

– Detach padding wire -1- (on front side of backrest) using awl -V.A.G 1636- .

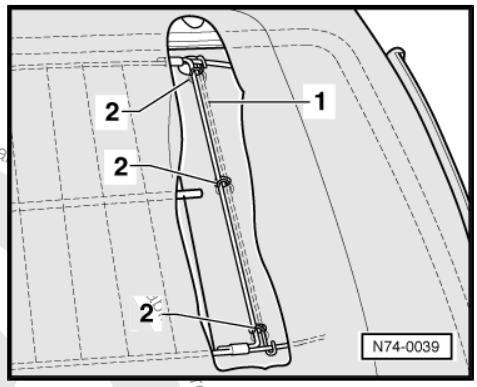

– Press together lower ends of guides -1- and -2- for headrest and pull out of backrest frame.

– Take off upholstery and padding with underlay from backrest frame.

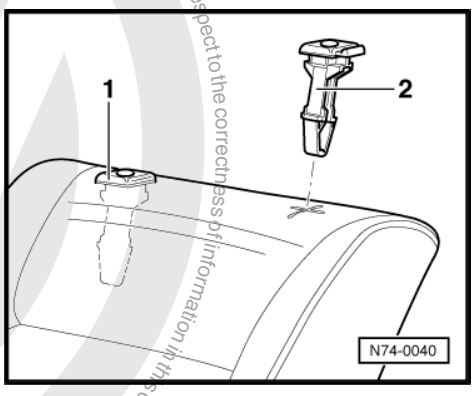

1.3.3 Fitting upholstery and padding

– Place underlay and padding onto backrest frame.

Protected by copyright. Copying for private or commercial purposes, in part or in whole, is not permitted unless authorised by Volkswagen AG. Volkswagen AG does not guarantee or accept any liability with respect to the correctness of information in this document. Copyright by Volkswagen AG.

satelettronica

– Place sliding cloth -1- to facilitate fitting upholstery onto top edge of padding.
– To facilitate installation, heat upholstery to 30 °C.

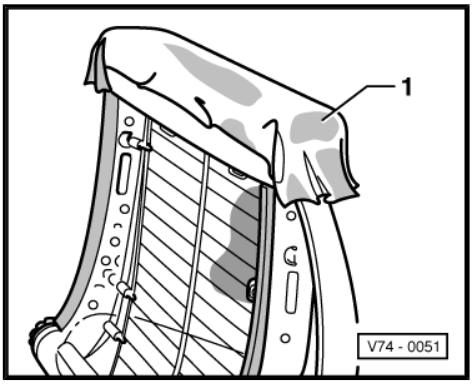

– Draw backrest upholstery on until ends of padding wire -1- can be guided through padding and attached to backrest frame.
– Install padding clips -2- with upholstery clip pliers -V.A.G 1634- (sport seat only).
– Pull backrest upholstery on completely.

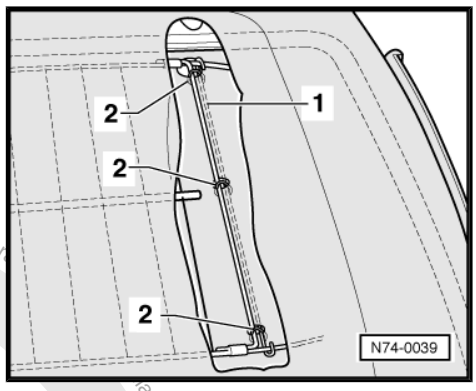

– Install guides -1- and -2- for headrest. (Guide -2- with push-button on left in direction of travel).

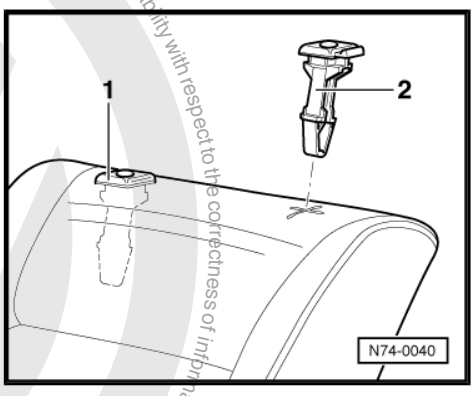

– Attach tensioning wires -1- (sport seats only).
– Join clip profiles -2- on underside of backrest.
– Complete backrest with headrest and operating handle with trim (two-door vehicles only).

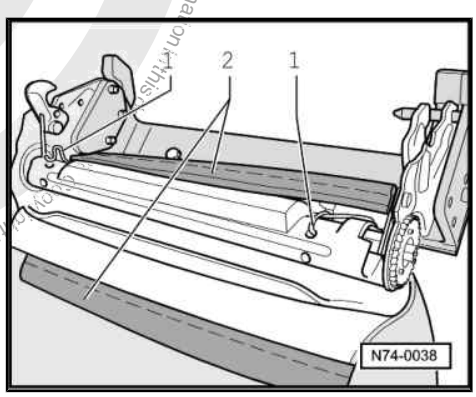

Protected by copyright. Copying for private or commercial purposes, in part or in whole, is not permitted unless authorised by Volkswagen AG. Volkswagen AG does not guarantee or accept any liability with respect to the correctness of information in this repair manual.
Protected by copyright. Copying for private or commercial purposes, in part or in whole, is not permitted unless authorised by Volkswagen AG.
satelettronica

2 Seat heater elements

2.1 Removing and installing seat heater element

2.1.1 Removing

> ⚠ **WARNING**
>
> *Vehicles with leather equipment must not be fitted with standard heater elements for cloth covered seats.*
>
> *There is a danger of the seat heater overheating.*

– Remove seat ⇒ page 132 .
– Remove backrest ⇒ page 137 .
– Remove seat cover ⇒ page 144 .
– Pull heater element -1- off padding -2-.

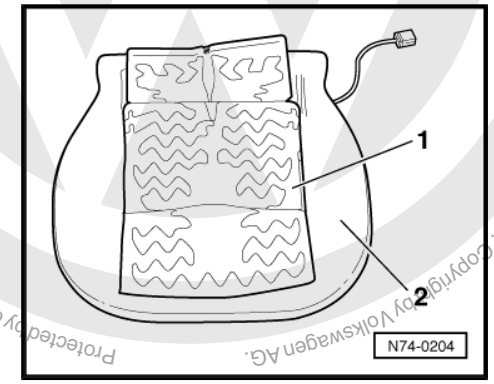

2.1.2 Installing

– Installation is carried out in reverse order of removal.

2.2 Removing and installing heater element for backrest

2.2.1 Removing

> ⚠ **WARNING**
>
> *Vehicles with leather equipment must not be fitted with standard heater elements for cloth covered seats.*
>
> *There is a danger of the seat heater overheating.*

– Remove seat ⇒ page 132 .
– Remove backrest ⇒ page 137 .
– Remove backrest cover ⇒ page 147 .
– Disconnect connector -5-.

Protected by copyright. Copying for private or commercial purposes, in part or in whole, is not permitted unless authorised by Volkswagen AG. Volkswagen AG does not guarantee or accept any liability with respect to the correctness of information in this document. Copyright by Volkswagen AG.
satelettronica

– Guide cable -1- through opening -2- in middle part of padding -3- and remove heater element -4-.

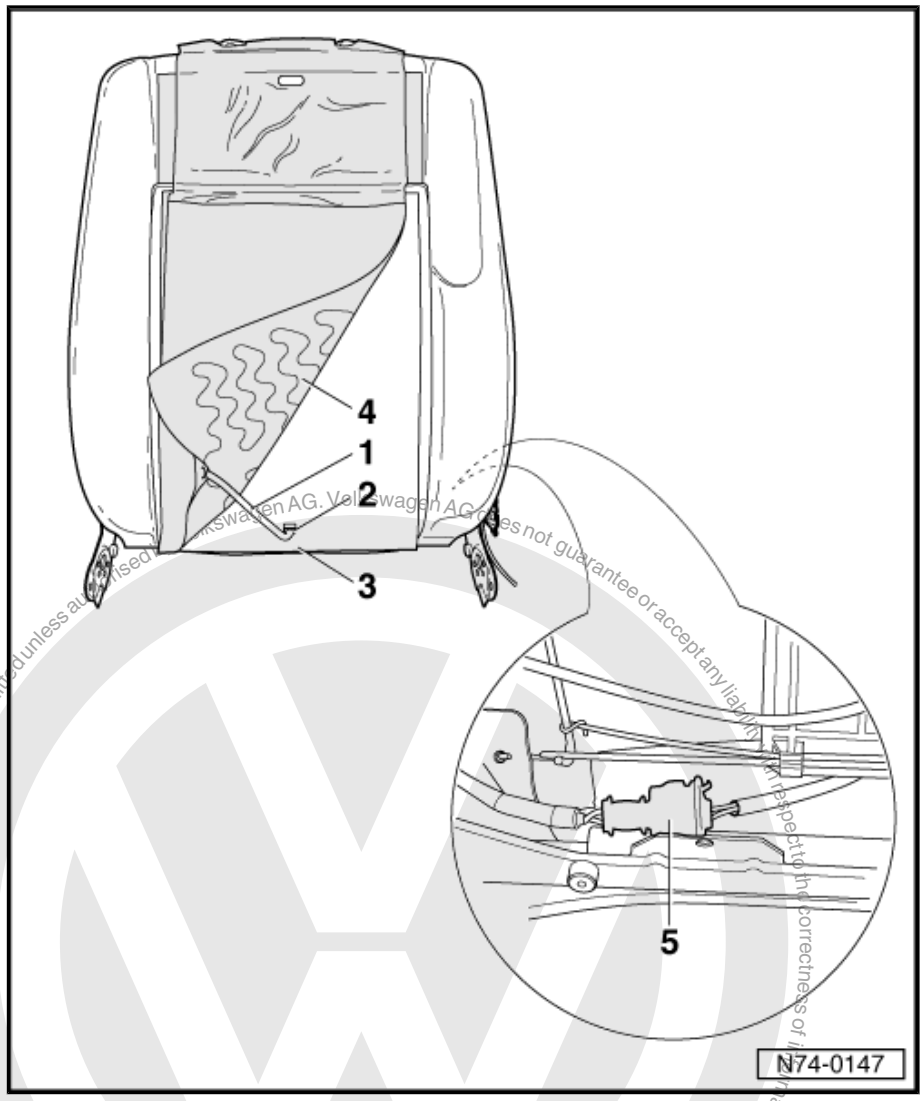

2.2.2 Installing

– Installation is carried out in reverse order of removal.

Protected by copyright. Copying for private or commercial purposes, in part or in whole, is not permitted unless authorised by Volkswagen AG. Volkswagen AG does not guarantee or accept any liability with respect to the correctness of information in this document. Copyright by Volkswagen AG.
satelettronica

3 Rear seat covers and padding

3.1 Tools

Special tools and workshop equipment required

- Awl -V.A.G 1636-

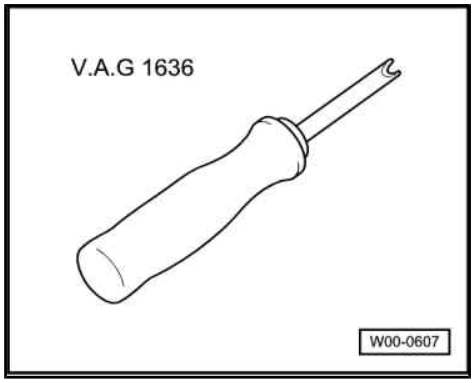

3.2 Removing and installing cover and padding for (one-piece) bench seat

1 - Padding wire

- ❑ Hooked into padding; hook and unhook using awl -V.A.G 1636- .

2 - Seat cover

- ❑ With sewn-on clamping bar.
- ❑ Removing:
  - – Unhook clamping bar from wire frame.
  - – Unhook padding wires.

3 - Padding

4 - Wire frame

5 - Spring clip

- ❑ Hooked into hinge.

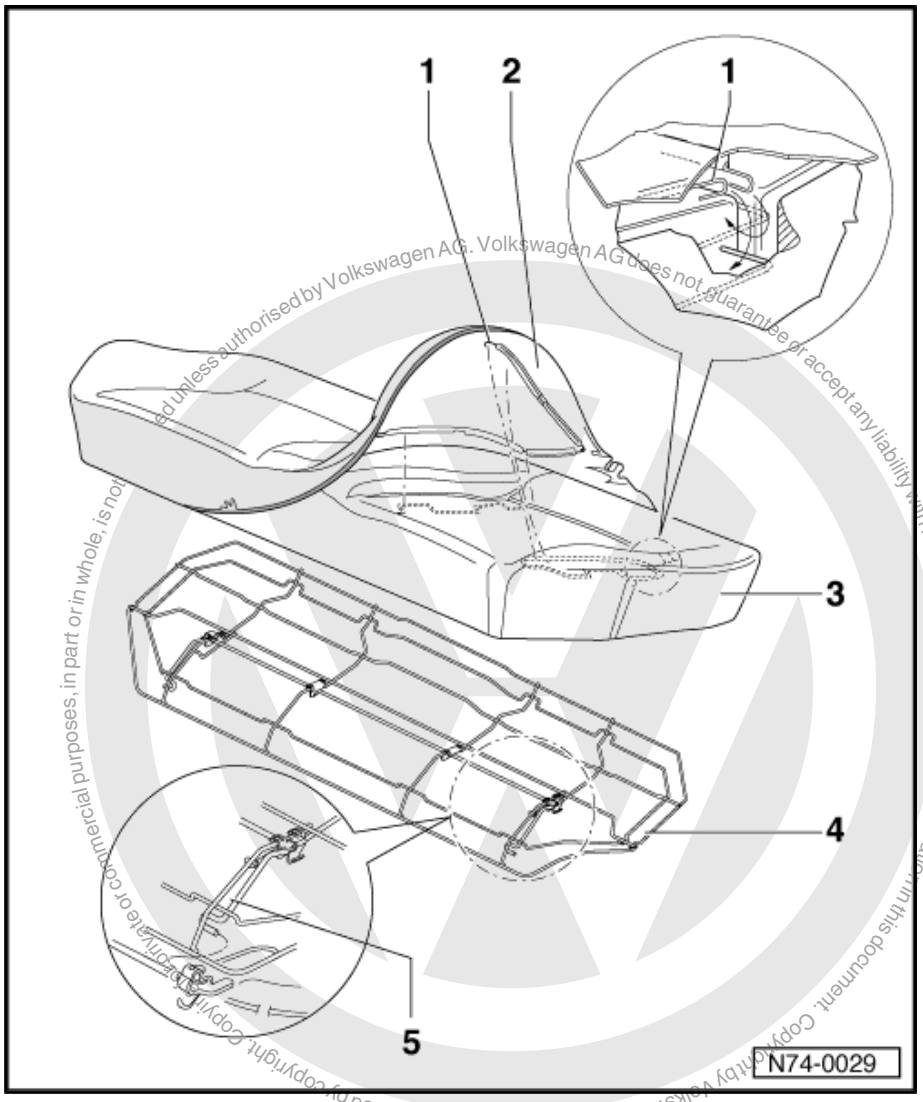

satelettronica
Protected by copyright. Copy, distribute or commercial purposes, in part or in whole, is not allowed unless authorised by Volkswagen AG. Volkswagen AG does not guarantee or accept any liability with respect to the correctness of information in this document. Copyright by Volkswagen AG.

3.3 Removing and installing cover and padding for (one-piece) backrest

1 - Seat cover

- ❑ Seat cover is secured to rear wall flange with the sewn-in clamping profile

2 - Padding wire

- ❑ Hooked into padding; hook and unhook using awl -V.A.G 1636- .

3 - Retaining hook

4 - Trim collar

5 - Pull rod

6 - Guide

- ❑ To remove, loosen cover from rear wall, grip under padding and bracket/headrest, press retaining lug for guide -arrow- and pull guide out.

7 - Back wall

8 - Bracket/headrest

9 - Pin for backrest lock

10 - Hexagon socket-head bolt

- ❑ 12 Nm

11 - Padding

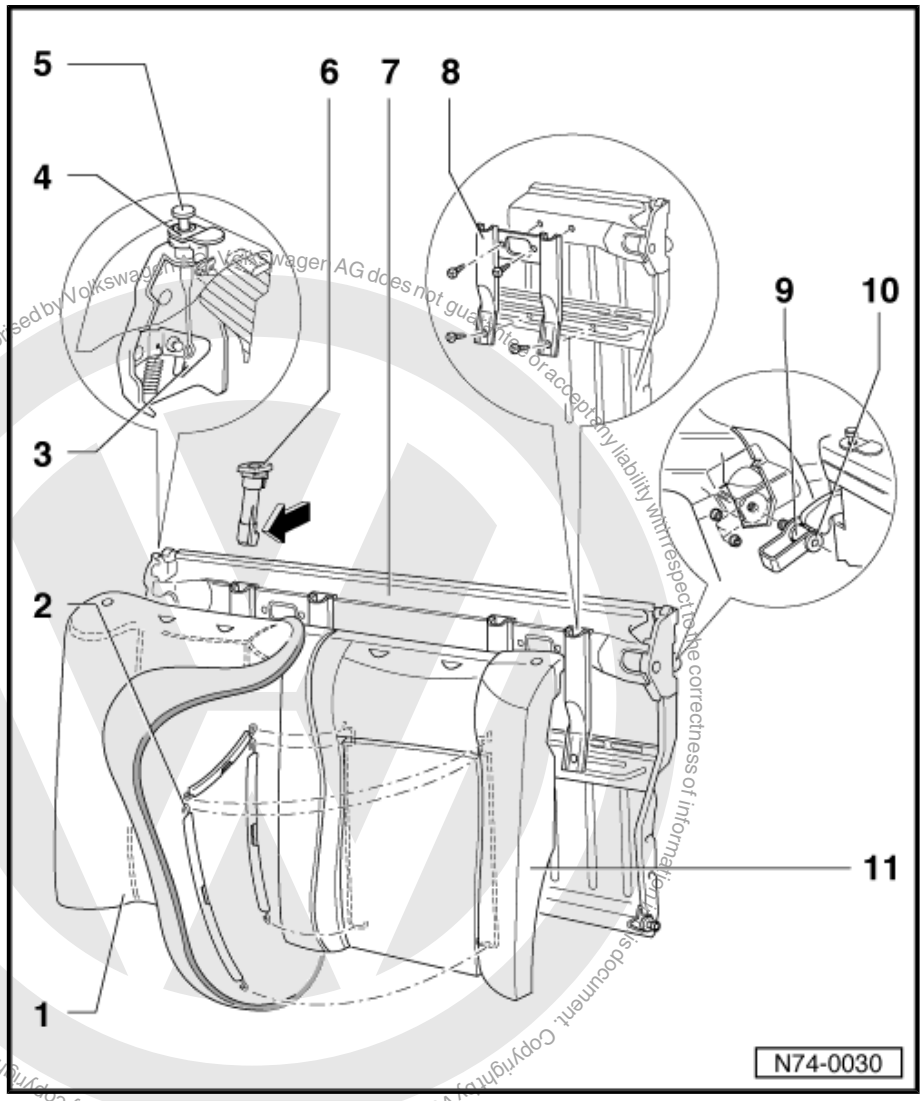

Protected by copyright. Copying for private or commercial purposes, in part or in whole, is not permitted unless authorised by Volkswagen AG. Volkswagen AG does not guarantee or accept any liability with respect to the correctness of information in this document. Copyright by Volkswagen AG.
satelettronica

3.4 Removing and installing covers and padding for (divided) bench seat

1 - Seat cover

- ❑ With sewn-on clamping bar.
- ❑ Removing:
  - – Unhook clamping bar from wire frame.
  - – Unhook padding wires.

2 - Padding wire

- ❑ Attached into padding; attach and detach using awl -V.A.G 1636- .

3 - Padding

4 - Support

5 - Wire frame

6 - Spring clip

- ❑ Hooked into hinge.

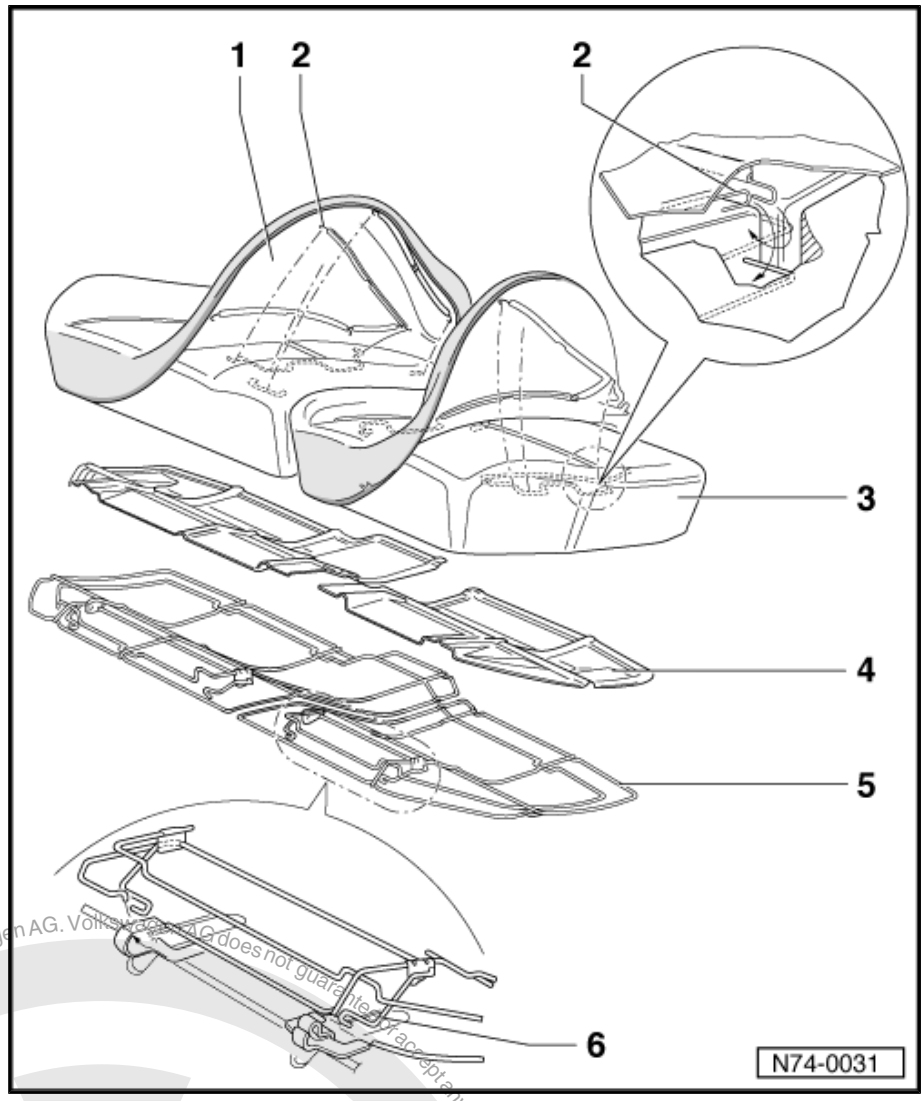

Protected by copyright. Copying for private or commercial purposes, in part or in whole, is not permitted unless authorised by Volkswagen AG. Volkswagen AG does not guarantee or accept any liability with respect to the correctness of information in this document. Copyright by Volkswagen AG.

satelettronica

3.5 Removing and installing covers and padding for (divided) backrest

1 - Trim collar

2 - Pull rod

3 - Retaining hook

4 - Bracket/headrest

5 - Pin for backrest lock

6 - Hexagon socket-head bolt
- ❑ 12 Nm

7 - Guide
- ❑ To remove, loosen cover from rear wall, grip under padding and bracket/headrest, press retaining lug for guide -arrow- and pull guide out.

8 - Back wall

9 - Padding

10 - Padding wire
- ❑ Attached into padding; attach and detach using awl -V.A.G 1636- .

11 - Cover (single seat)
- ❑ Seat cover is secured to rear wall flange with the sewn-in clamping profile

12 - Cover (double seat)
- ❑ Seat cover is secured to rear wall flange with the sewn-in clamping profile

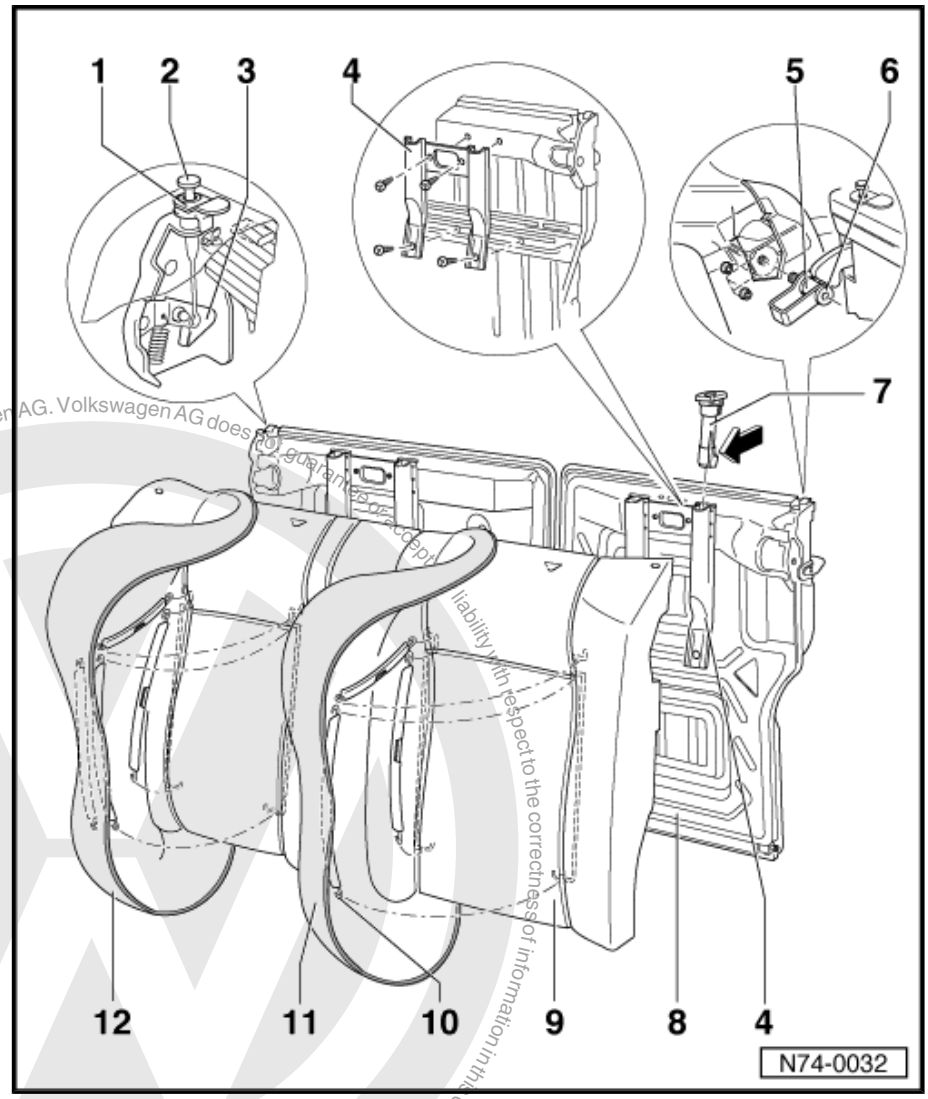

Protected by copyright. Copying for private or commercial purposes, in part or in whole, is not permitted unless authorised by Volkswagen AG. Volkswagen AG does not guarantee or accept any liability with respect to the correctness of information in this document. Copyright by Volkswagen AG.
satelettronica